Visualization and Interaction

Visualization and Interaction

4.1 Introduction and motivation

4.2 Fundamentals

- interactive computer graphics
- viewing in 3D
- virtual reality (VR)
- augmented reality (AR)
- haptic feedback

4.3 Application

- Virtual Reality Modeling Language (VRML)
- VR / AR input devices
- VR / AR output devices
- parametric modeling example

4.4 Key Issues

4.5 Summary

4.6 Further Reading

Dissection of a CAD tool – basic modules

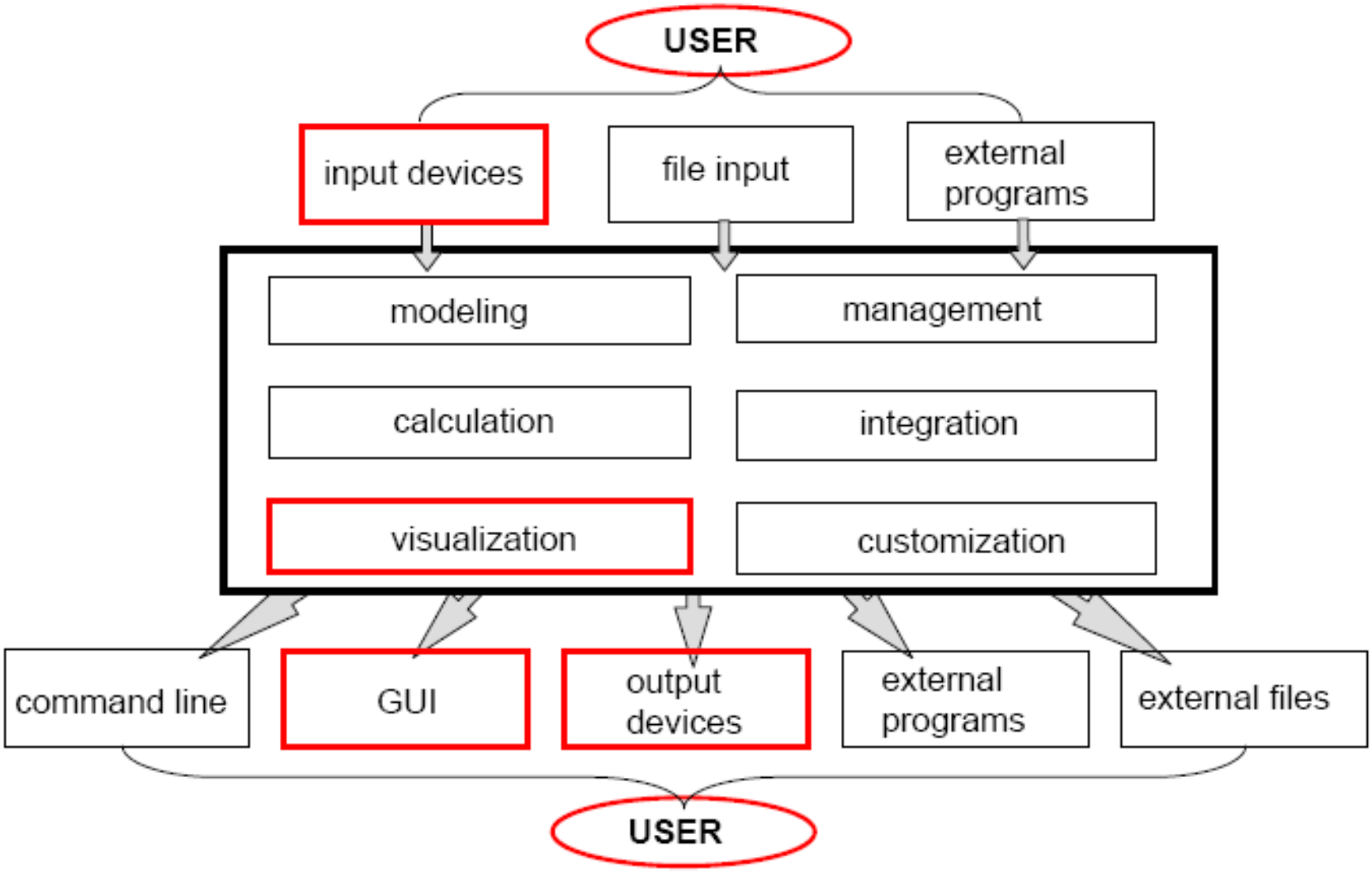

4.1 Introduction

- Interactive shape and model manipulation play a major role in CAx tools today.
- Visualization using computers enables effective communication of a design to all people in product development in various functions within the process.
- Computer visualization enables:
  - design communication
  - common understanding, e.g. between design and manufacturing
  - new information and understanding to be revealed, e.g. system interfaces
  - reduces time for and enhances decision making
- The primary goal of visualization and interaction with CAx tools is to create systems that are:
  - highly visual and interactive
  - Intuitive
  - easy to learn and use
  - Stable
  - customizable

Early Beginnings

- Sketchpad by Ivan Sutherland, MIT, 1963
  - 2D wireframe objects
- DAC-1, General Motors and IBM, 1964
  - 3D freeform components, tools and dies
- 1st mouse, Doug Englebart, SRI, 1963
- 1st graphics tablet, Grafacon, 1964

Ivan Sutherland demonstrating Sketchpad.

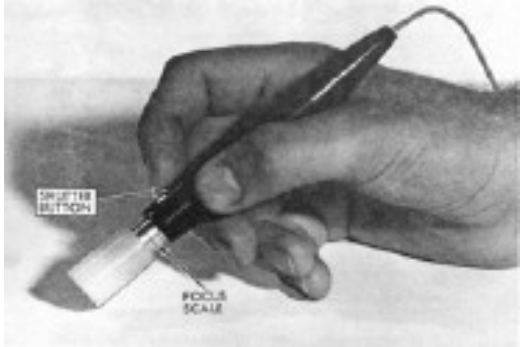

Light pen used to draw on computer screen.

DAC-1

Development of User Interfaces

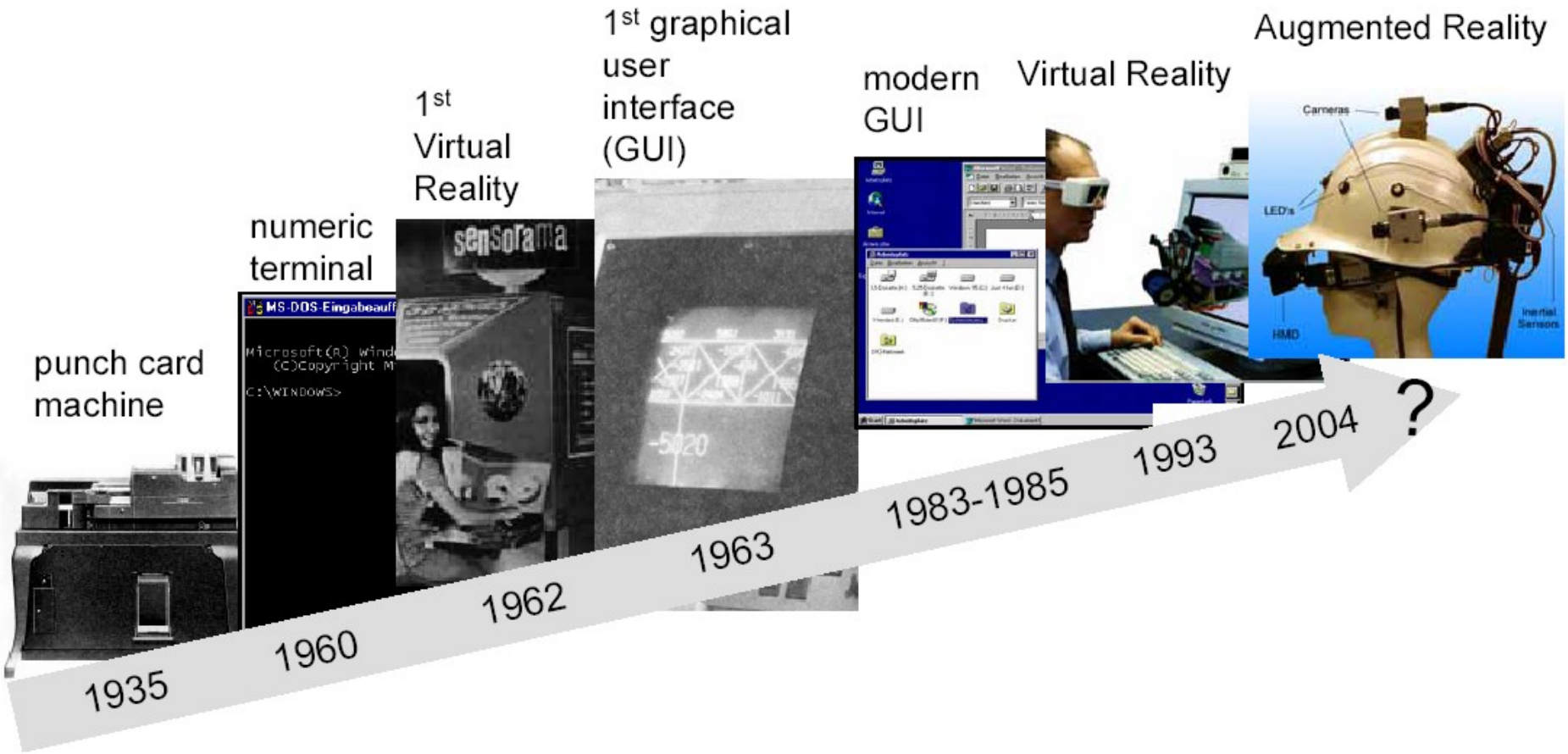

CAD Interfaces Evolution

CATIA V2, ~1985

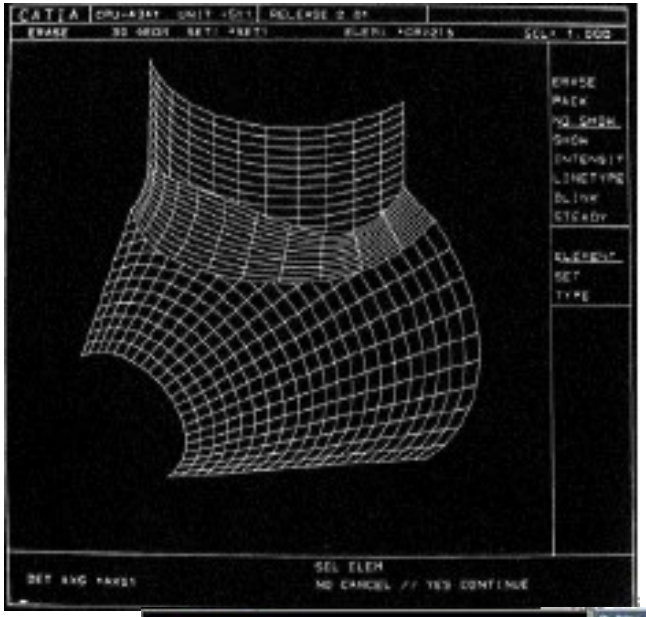

CAD tablet, ~1986

Pro/ENGINEER v11, ~1994

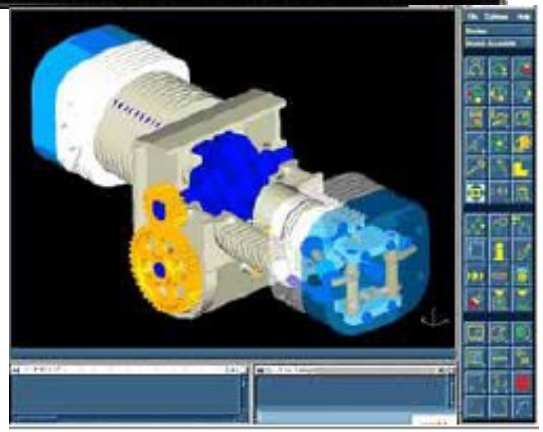

SDRC I-DEAS “Master Series”, ~1993

CAD Interfaces Today

- most CAD systems now have a Windows “look and feel”
- useable by a wider range of people
- shorter training required often
- extensive, high-quality visualization functionality on desktop PCs
- interfaces can be customized

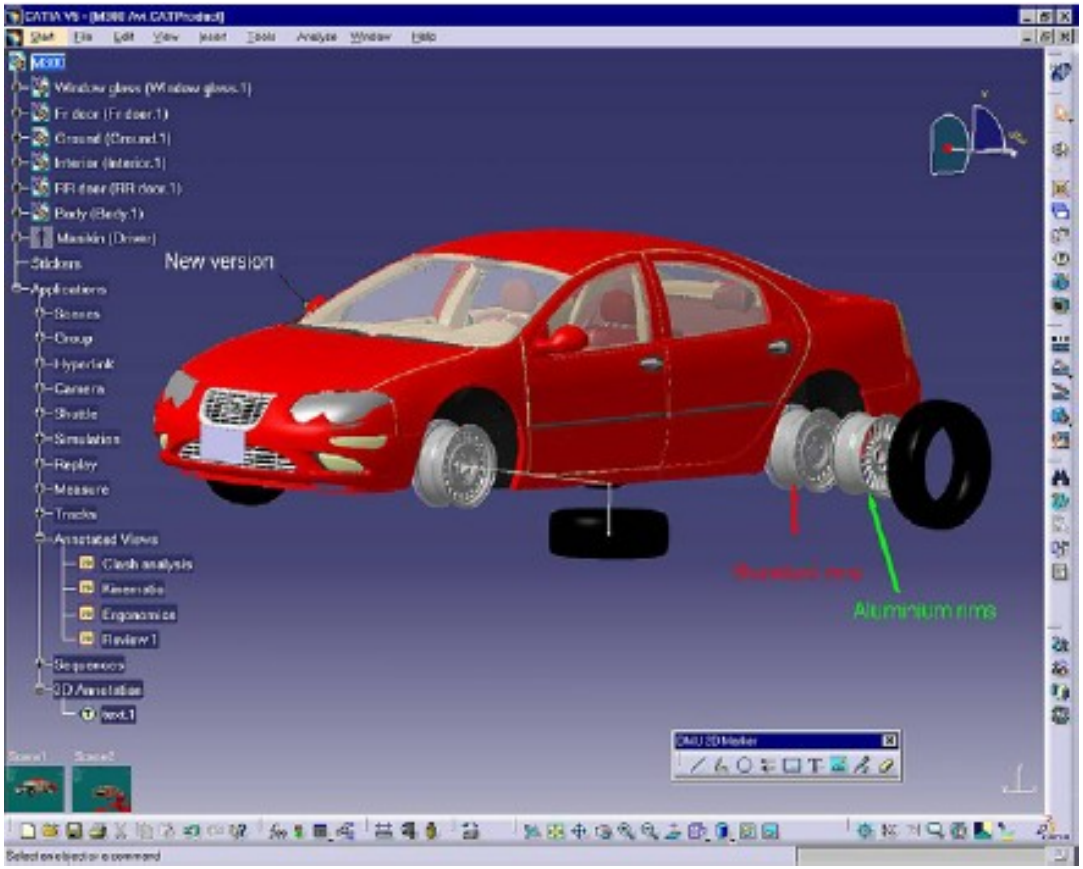

CATIA V5 DMU

Interactive Computer Graphics

basic framework

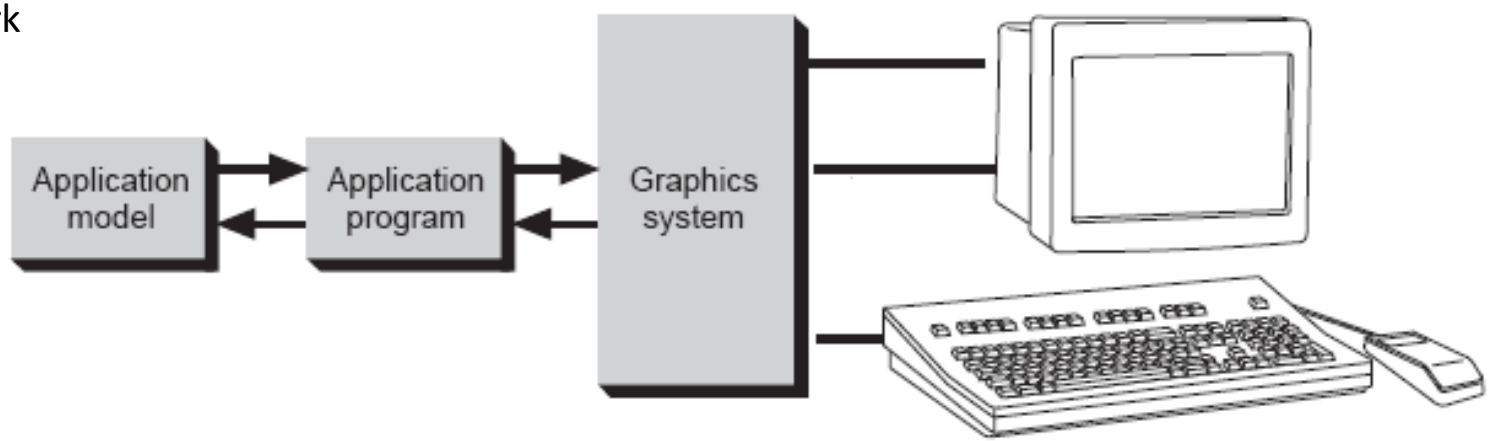

human-computer interaction (HCI)

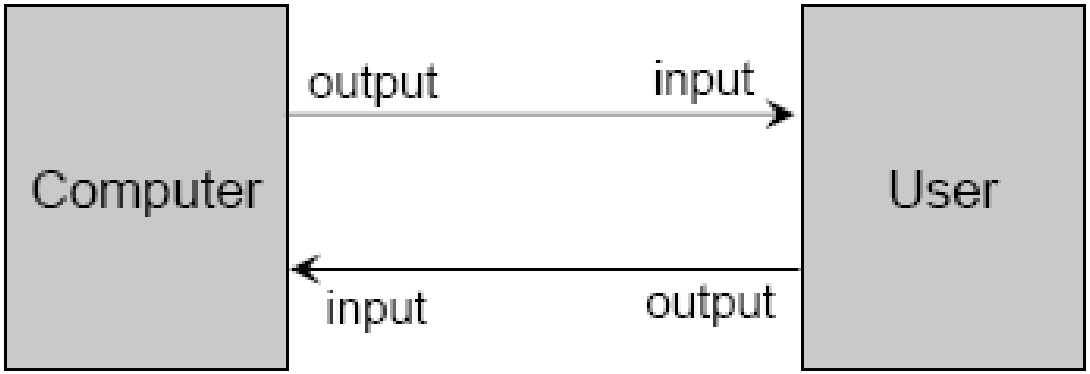

top image source: Foley et al.

Computer Graphic Display Types

- vector displays
  - a set of line segments are drawn via electron beams
- raster displays
  - a matrix of pixels represent the entire screen
  - individual pixels can be turned on to the required intensity and color

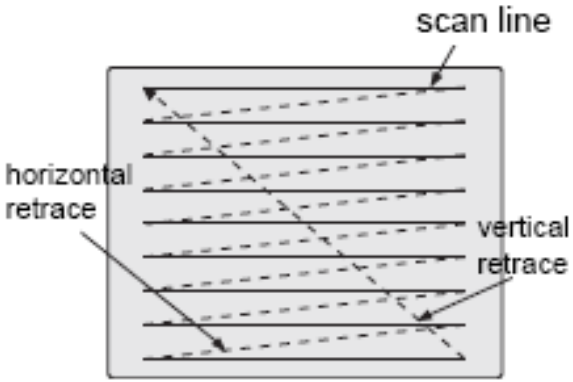

raster scan

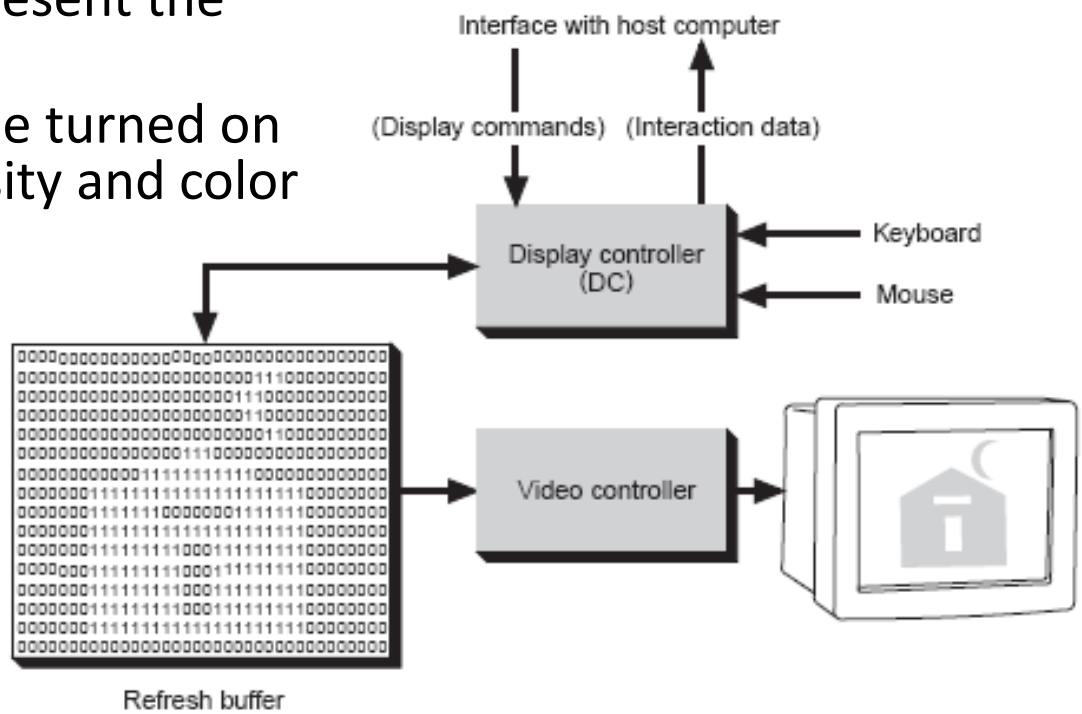

image source: Foley et al.

raster display architecture

Graphics Pipeline

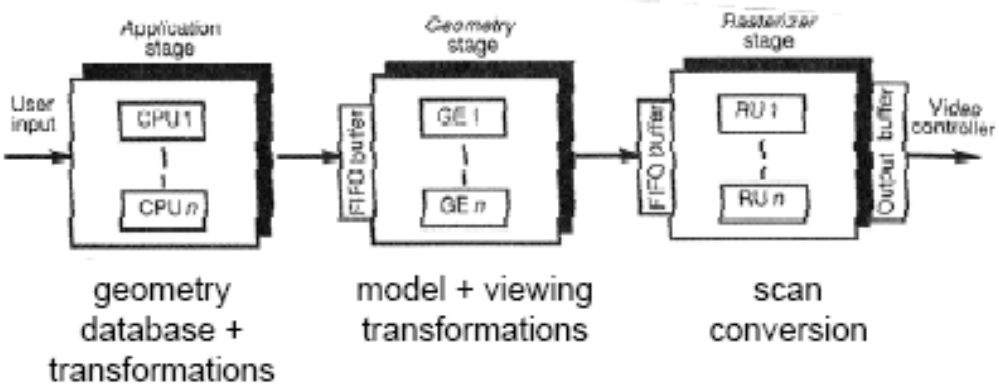

OpenGL graphics “pipline”

- graphics accelerator cards move the geometry stage graphics calculations from the main CPU to a special chip on the graphics card
- this results in faster visualization and interaction speeds

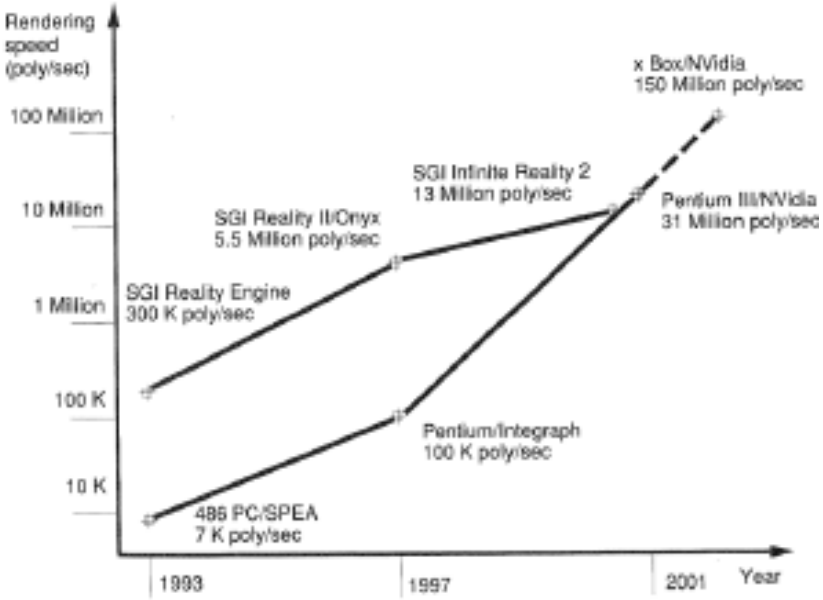

image source: Burdeaand Coiffet

Graphics Libraries

- provide a set of subroutines for creating computer graphics
- should be device independent
- need to enable fast display of images
- features include:
  - a rich set of graphics primitives such as lines, shapes, text etc.
  - ability to work in application coordinate system
  - support for interactive graphics
  - dynamic display
  - modeling transformations
  - viewing transformations
  - …

- Examples:
  - GKS(Graphics Kernel System, ISO)
  - GKS-3D (ISO)
  - PHIGS (Programmer's hierarchical interactive graphics system, ISO)
  - PostScript
  - X-Windows
  - OpenGL (SGI)
  - VRML and X3D

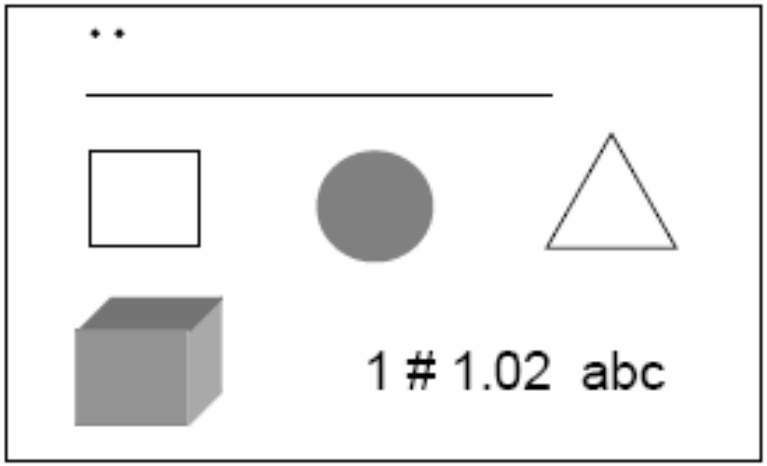

sample primitives

Coordinate Systems

- model coordinate system
- world coordinate system
- viewing coordinate system
- normalised device coordinate system (NDC)
- device, e.g. screen, coordinate system (DC)

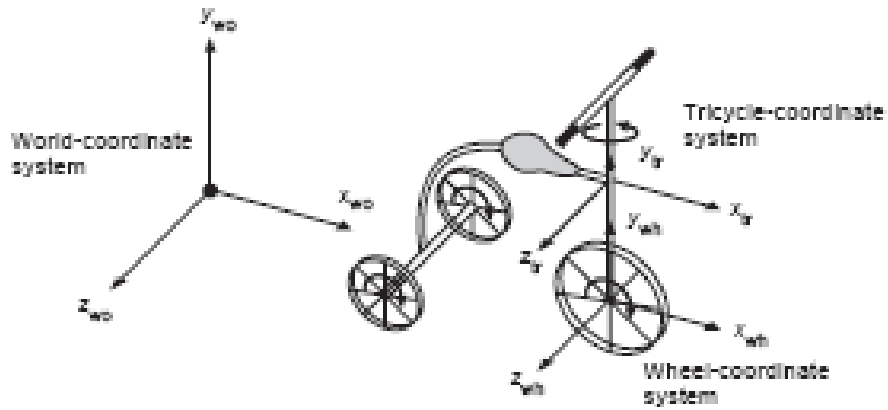

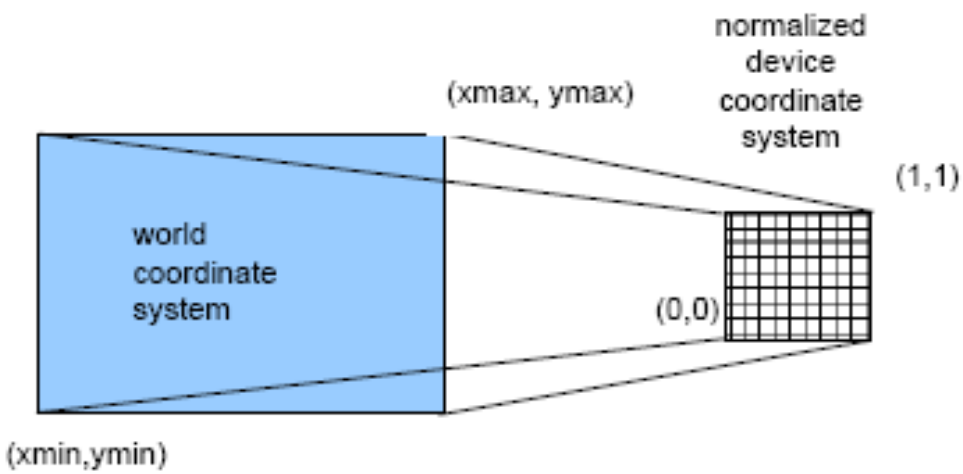

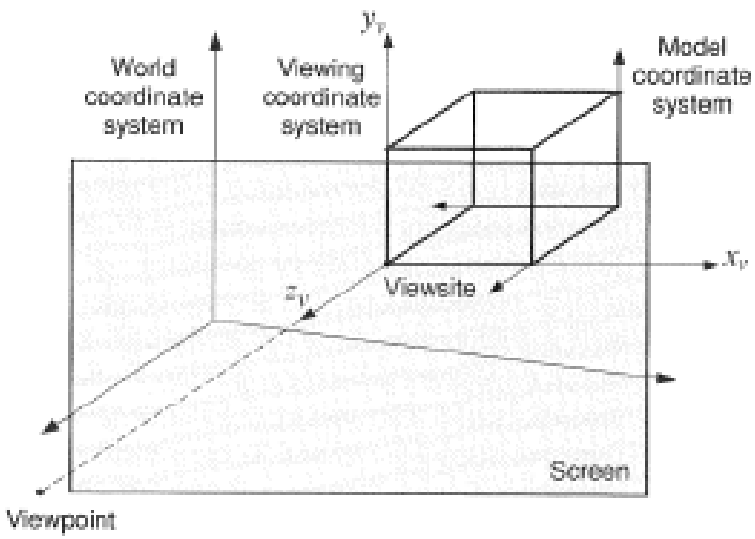

image source: Foley et al. and Lee

Projection Concepts

- viewpoint – viewer's eye
- Viewsite – point on an object that defines the view direction from eye to object
- projectors – projection of 3D object is defined by straight projection rays that start at the center of projection, pass through the object and intersect the projection plane

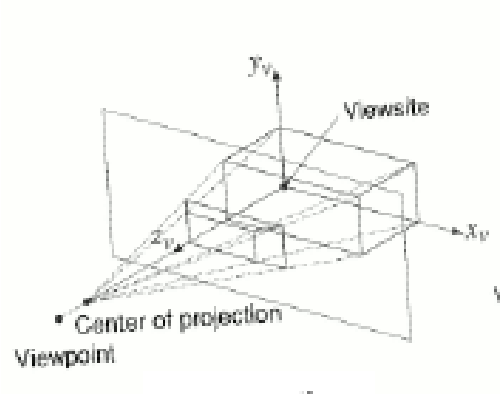

Perspective projection

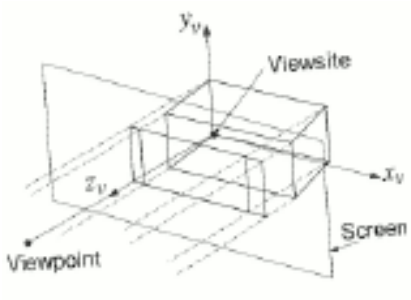

parallel projection

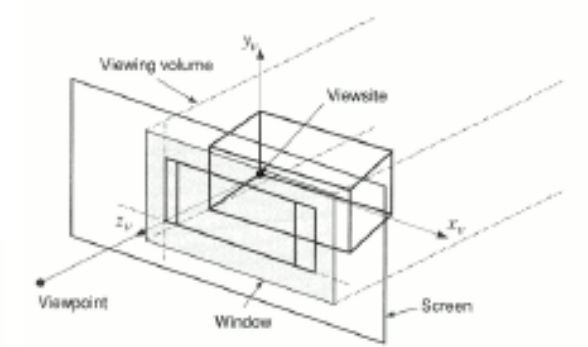

parallel projection

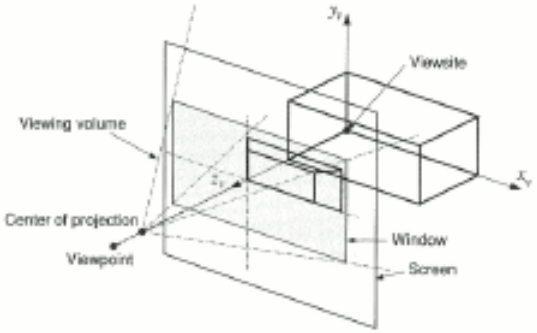

Perspective projection

Types of Projections

- perspective projections -one-point, two-point, three-point
- parallel projections –orthographic, oblique

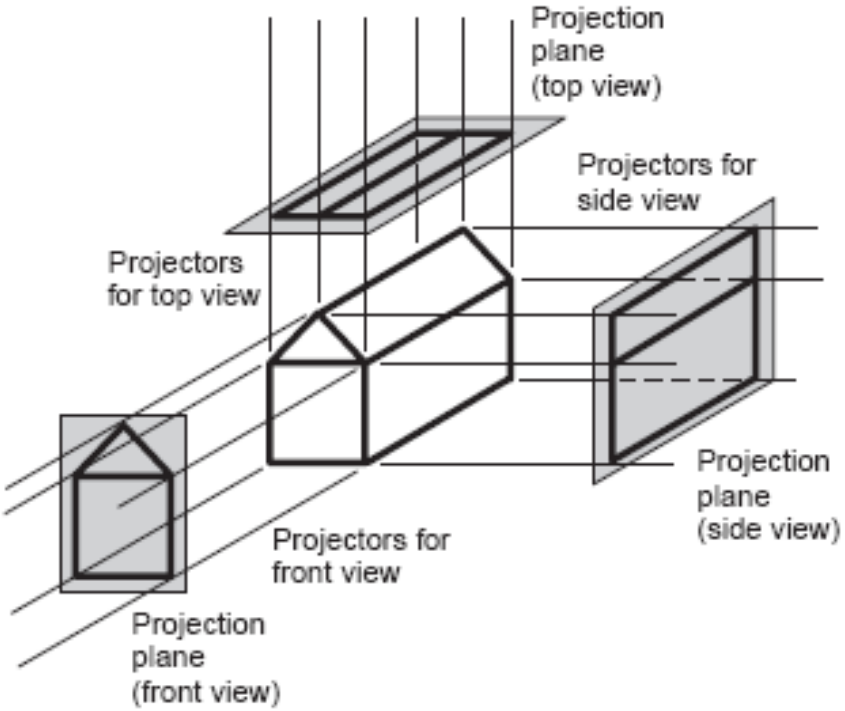

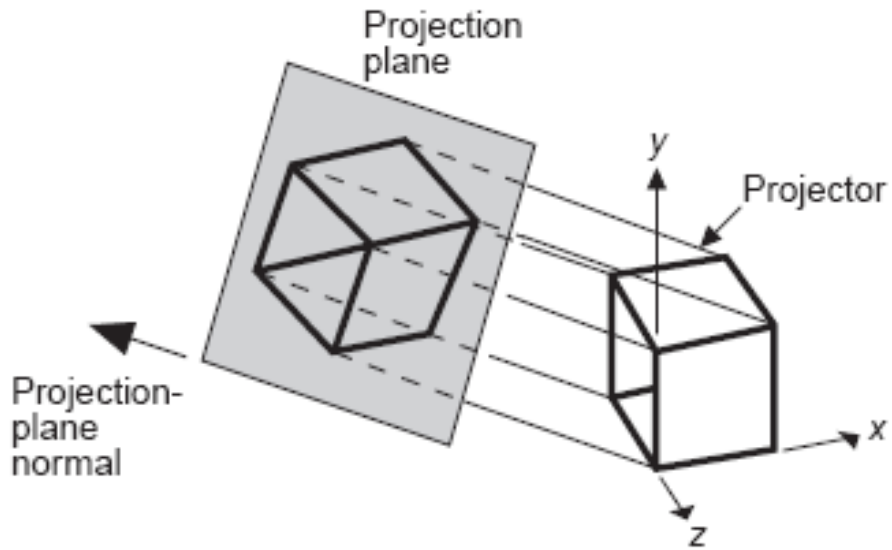

orthographic views

3D Geometric Transformations

- calculated using a transformation matrix that converts coordinates
- rotation
  - Rx(α) = [1 0 0; 0 cos(α)-sin(α); 0 sin(α)cos(α); 0 0 1]
  - Ry(β) = [cos(β)0 sin(β); 0 1 0; -sin(β)0 cos(β) ; 0 0 1]
  - Rz(γ) = [cos(γ)-sin(γ) 0; sin(γ)cos(γ)0; 0 0 1; 0 0 1]
- translation
- scaling
- shear

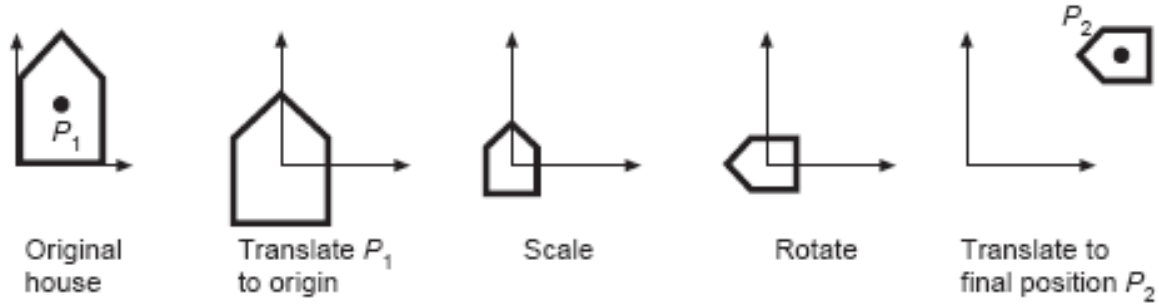

2D examples

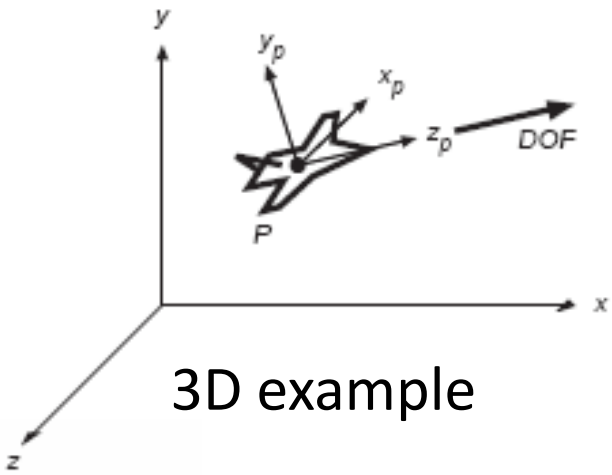

3D example

Hidden Line and Hidden Surface Removal

- hidden line removal –display only visible lines or line parts that are not obstructed; disadvantage is that they display less depth information
- hidden surface removal –display only parts of surface that are visible, essential for shaded views
- only surfaces can obscure other lines or surfaces–both require surface or solid models
- both depend on viewpoint

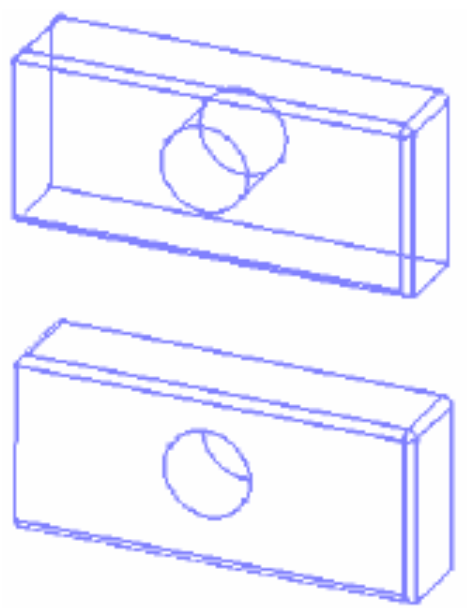

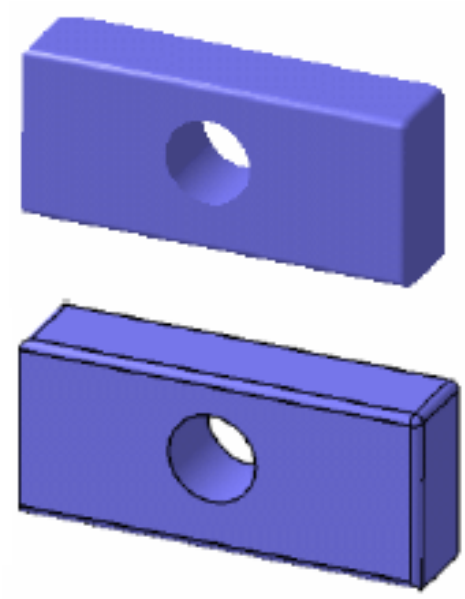

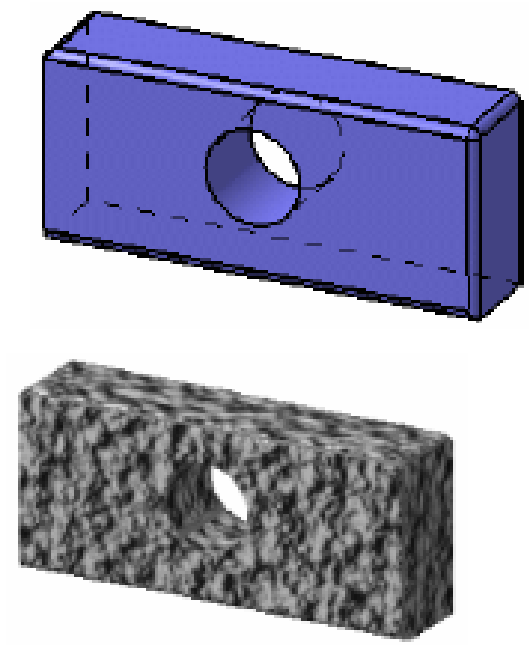

Virtual Reality

- virtual reality (VR) is a high-end user-computer interface that involves real-time simulation and interactions through multiple sensory channels
- sensory channels: visual, auditory, tactile, smell, taste
- VR enables intuitive interaction with virtual worlds
- high performance PCs and graphics hardware enable such interfaces
- the user, also called a **cybernaut**, immerses in a virtual world.
- to integrate the user in the virtual world three components are necessary, also called the three I´s:
  - **Immersion**: to be immersed in the virtual world. The more senses that are addressed the better the immersive impression.
  - **Interaction**: interaction with the virtual world. The user is able to use and manipulate the virtual world.
  - **Imagination**: is necessary to have the feeling of being part of the virtual world.

Virtual Reality -Examples

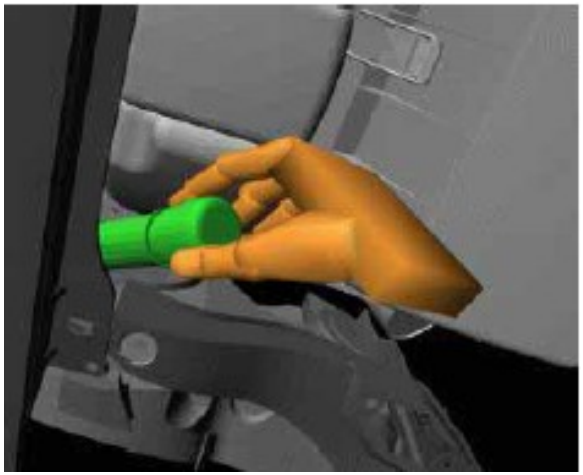

virtual assembly

design reviews

virtual plant (source: ETHZ, ZPE)

Stereoscopic Visualization

3D vision produced by the fusion of two slightly shifted images of a scene

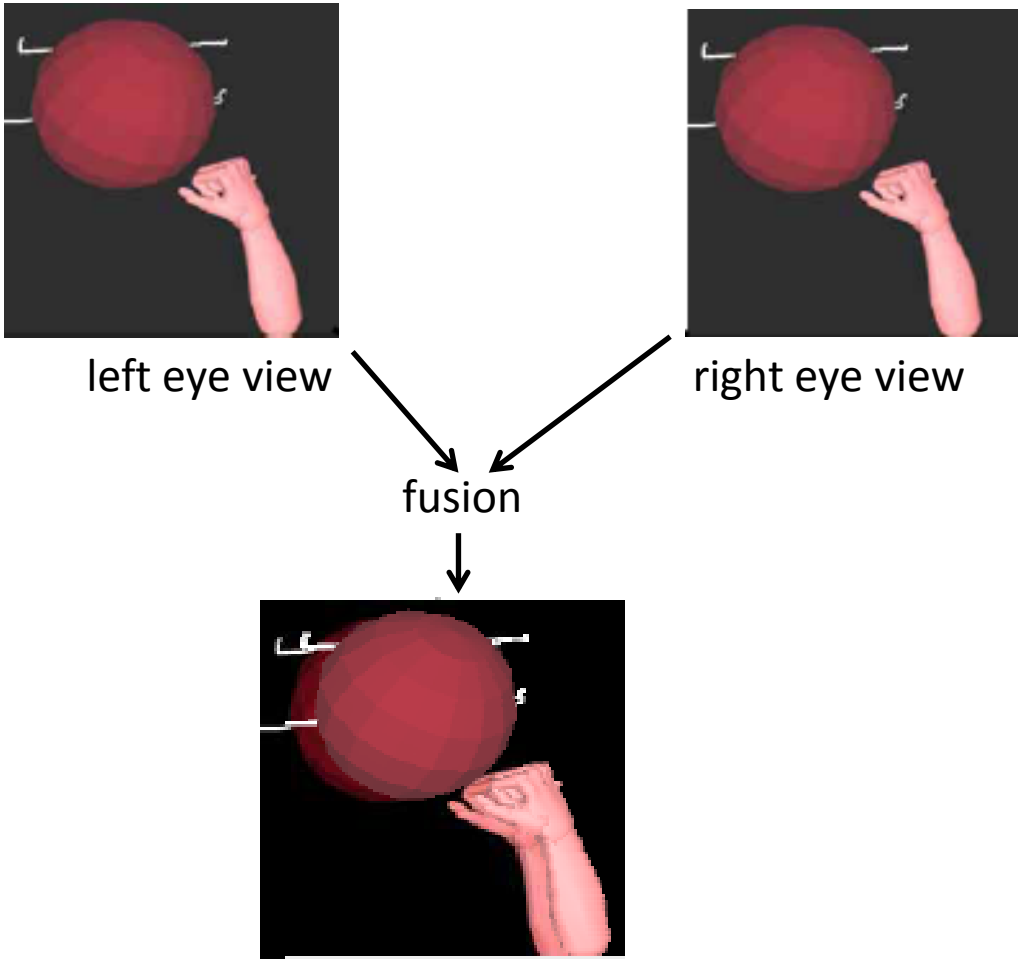

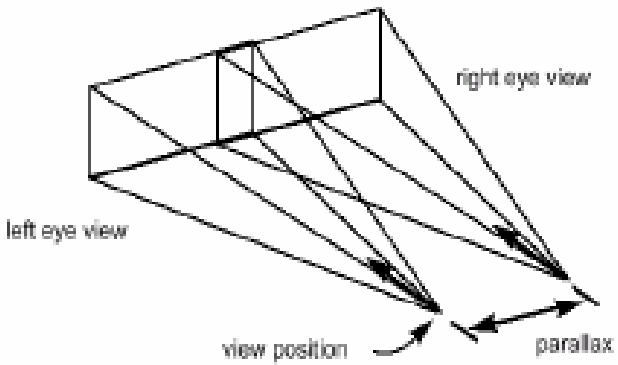

The distance between right eye and left eye view is called parallax. The optimal parallax value depends on the individual eye distance.

Active and Passive Stereo

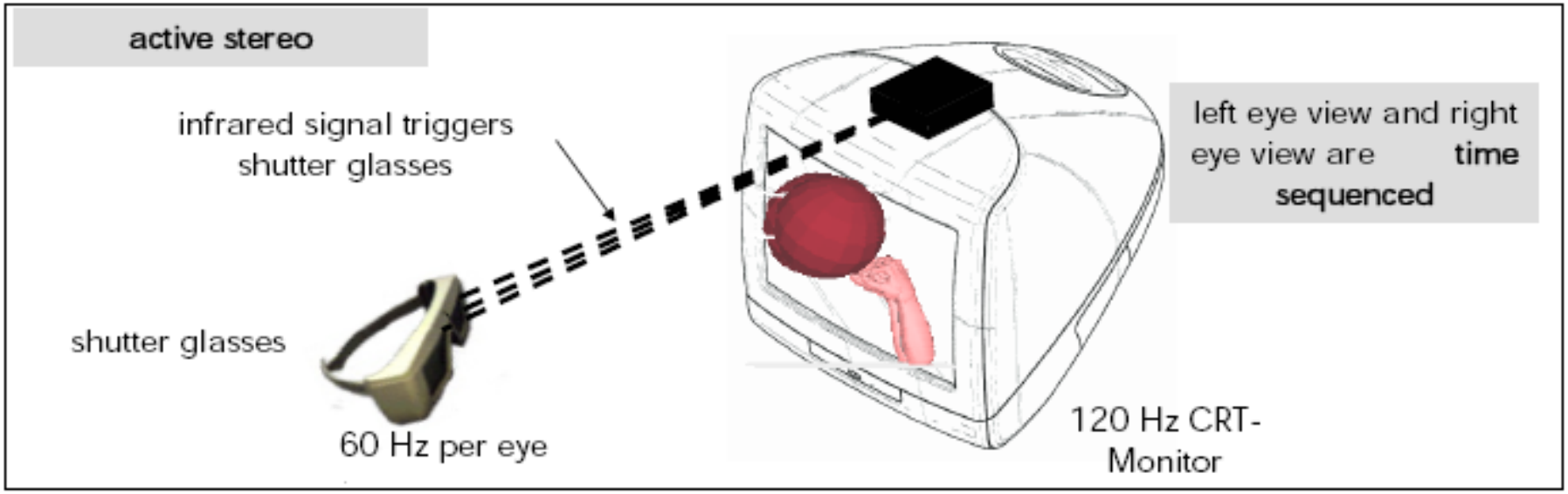

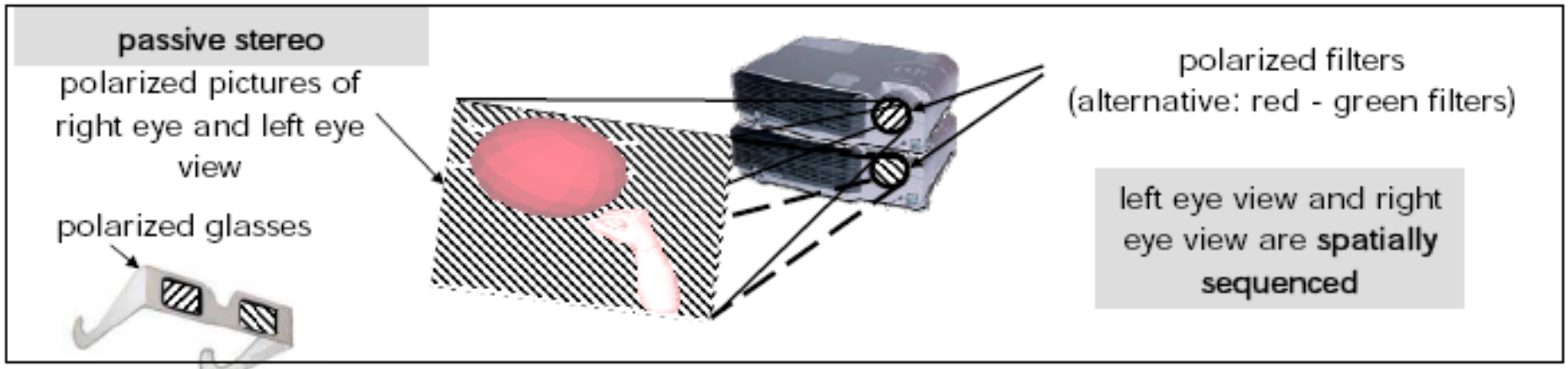

Perspective Stereo

- the immersive impression is improved by calculation of an individual's perspective
- this requires tracking of the position and orientation of the head
- only one perspective can be visualized at each time

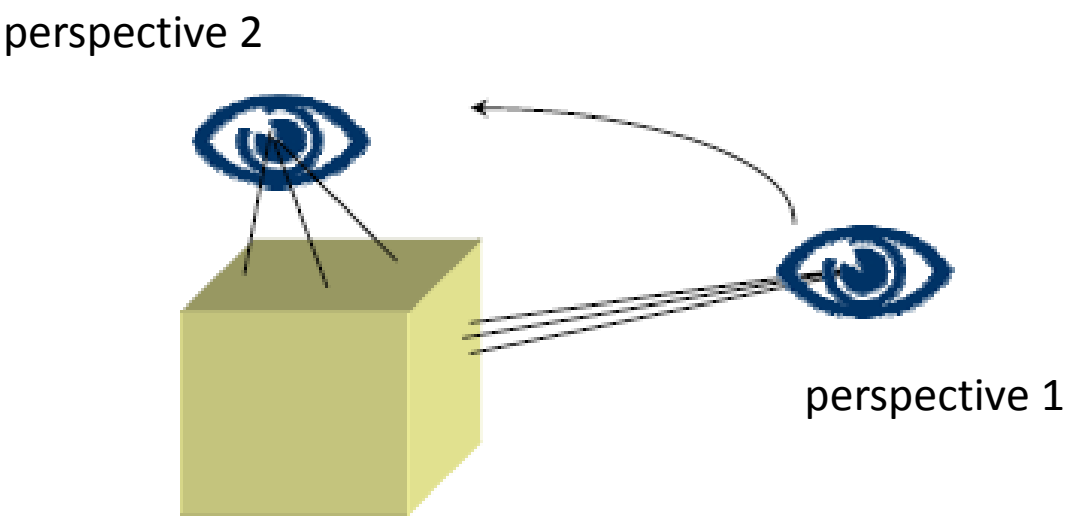

tracked glasses

Augmented Reality

- also known as mixed reality
- to help the human to perform certain tasks in real life, the real world is enriched with virtual information
- the idea is to place virtual information in the real world where it is needed
- necessary components include
  - specialized output devices, e.g. see through glasses
  - good tracking systems
  - algorithms for pattern recognition
- augmented Reality is often used in the fields of
  - military
  - medicine
  - assembly
  - maintenance
- more fields of application are being explored.

Vu-Man (source: CMU, ICES)

Augmented Reality -Examples

maintenance (source: HNI)

Mobile Augmented Reality Versuchsplattform

military (source: NASA)

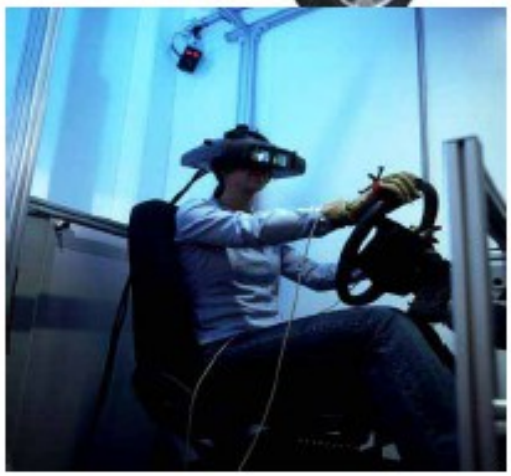

automotive development (source: TU Wein, IVK)

Augmented Reality -Example

- Augmented Reality (AR) for surgery:
- old system – use monitors to view information from instruments inside body
- AR sytem – view information using see through glasses to enrich the real world with virtual information
- tracking system for better precision

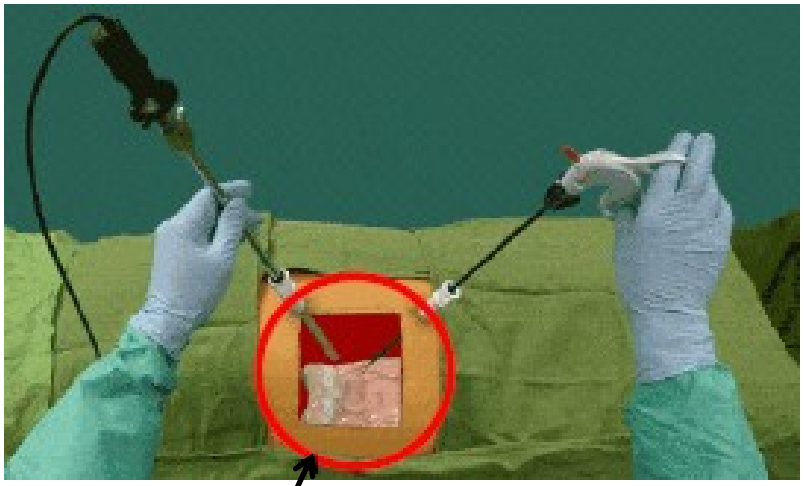

virtual information during surgery

source: InnerOpticTechnology

HapticFeedback

- Haptic feedback conveys important sensory information that helps users achieve tactile identification of virtual objects and move these objects to carry out a task
- touch feedback
  - provides real-time information on contact surface geometry, surface roughness, slippage, temperature, etc.
  - the virtual objects have no resistance to a user's contact and a user can move through virtual objects
- force feedback
  - conveys real-time information on contact surface compliance, object weight, and inertia
  - virtual objects actively resist the user's contact motion and can stop it

4.3 Applications –VRML and X3D

- VRML -Virtual Reality Modeling Language
  - an open standard for virtual reality modeling (on the internet)
  - VRML files define worlds, or scene graphs
  - worlds are represented by
    - built in geometric primitives including face sets and solids
    - lighting, material, texture, movie control
    - specialized sound
    - hyperlinking, viewpoints and navigation methods
    - collision detection
    - animated objects that react to users actions
    - ability to extend the language through prototyping
- VRML is still in use but has been superseded by X3D
- X3D is an open standards XML-enabled 3D file format to enable real-time communication of 3D data across all applications and network applications.

Minimal Invasive Chirurgic Robot

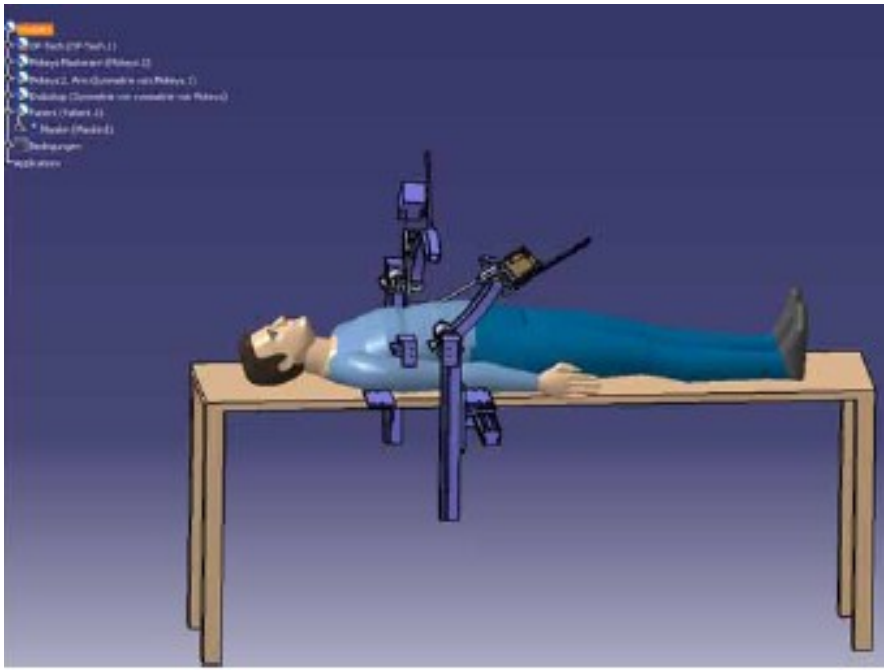

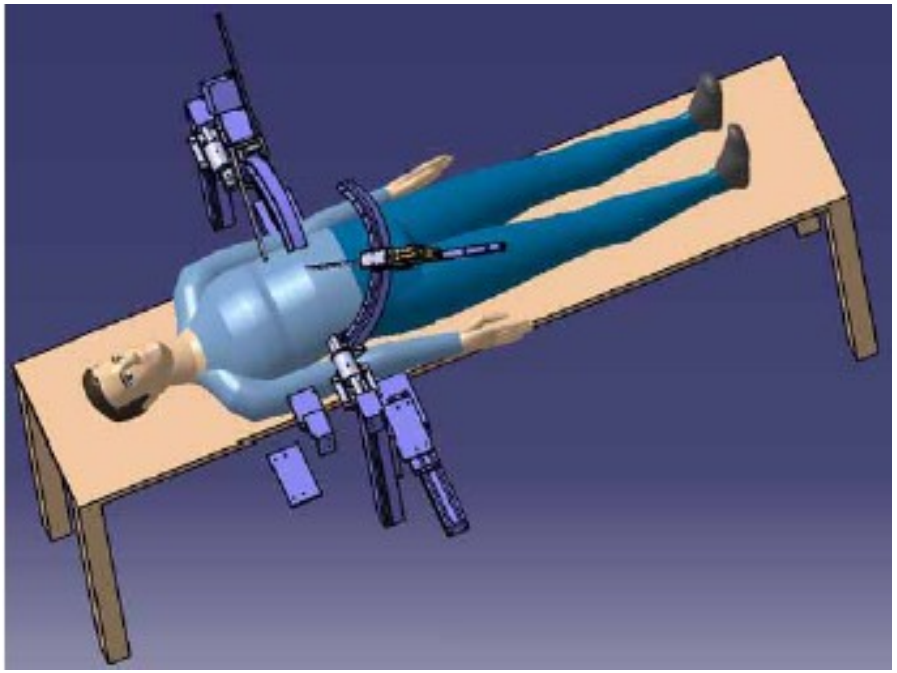

CATIA V5 model

Example VRML model

```
#VRML V2.0 utf8
WorldInfo {
    info [ "File created using CATIA" ]}
NavigationInfo {
    type [ "EXAMINE" , "WALK" , "FLY" ]}
Background {
    skyColor [ 1 1 1 ]}
Viewpoint {
    position    -0.543342 2.243068 4.067684
    orientation -0.041618 0.311616 0.949299 3.048537
    fieldOfView   0.471225
    description   "Main Viewpoint"}
…
Transform {
    scale         0.001 0.001 0.001
children [
…
Transform {
    translation   573.163 209.268 33.2755
    rotation      5.32524e-014 7.98128e-015 1 0.262026
children [
…
Shape {appearance Appearance {
    material DEF _material0 Material {
          diffuseColor  1 0.827451 0.658824}}
geometry IndexedFaceSet {
solid FALSE
coord Coordinate {
    point [-2170 -450 30, -2170 -450 0,
           -2170 10 0, -2170 10 30,]}
coordIndex [3,2,0,-1,2,1,0,-1,]}
```

file information

mode of user interaction

set viewpoints

define a new local coordinate system

define a set of planar faces in the local coordinate system

Minimal Invasive Chirurgic Robot

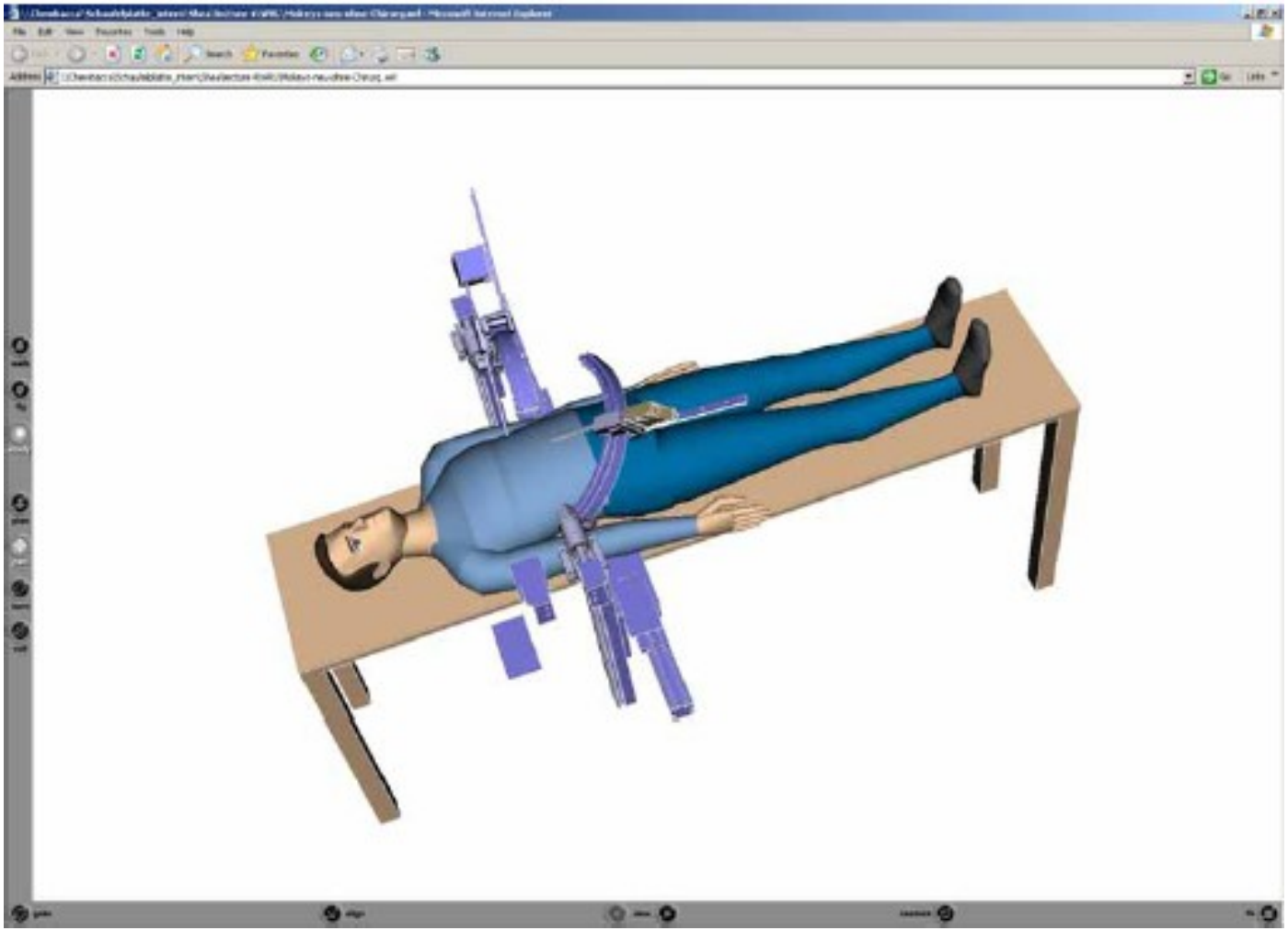

exported VRML model viewed in Cortona VRML client

Input Tablets and Digital Pens

Input tablets for CAD applications

- touch sensitive tablet
- programmable tablets buttons
- pen can be used as an analog to a mouse
- programmable mouse

example from: www.wacom.com

3D Sketcher

- sketch in 3D
- touch sensitive tablet
- pen with up to three buttons

VR Input Devices

6 DOF controllers
(e.g. Space mouse)

voice control

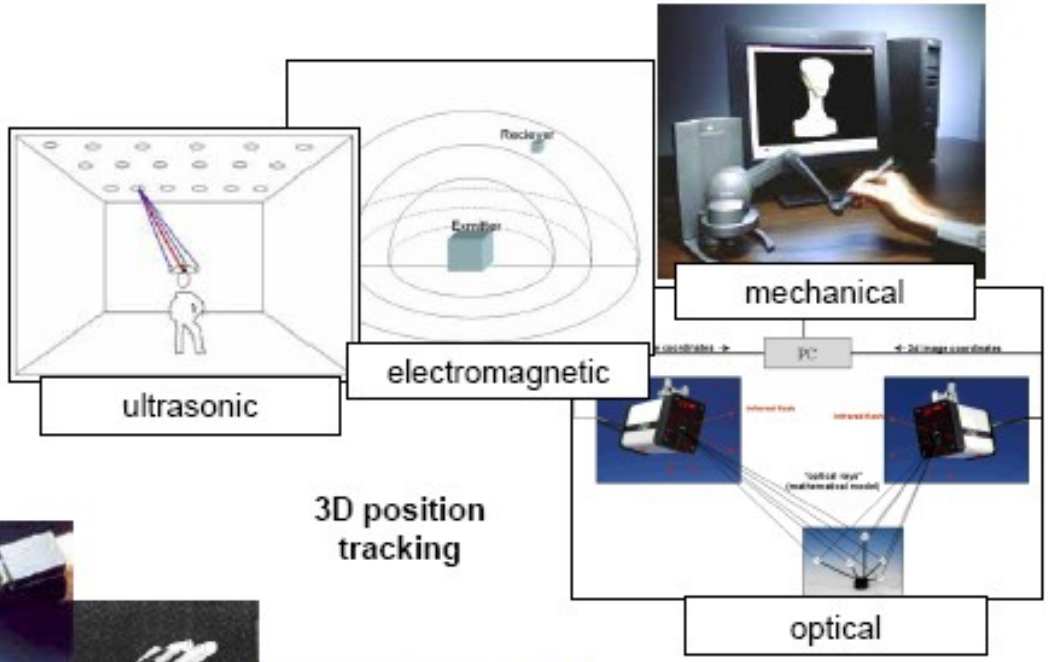

3D position
tracking

data gloves

Gesture Interfaces – Cyber Glove

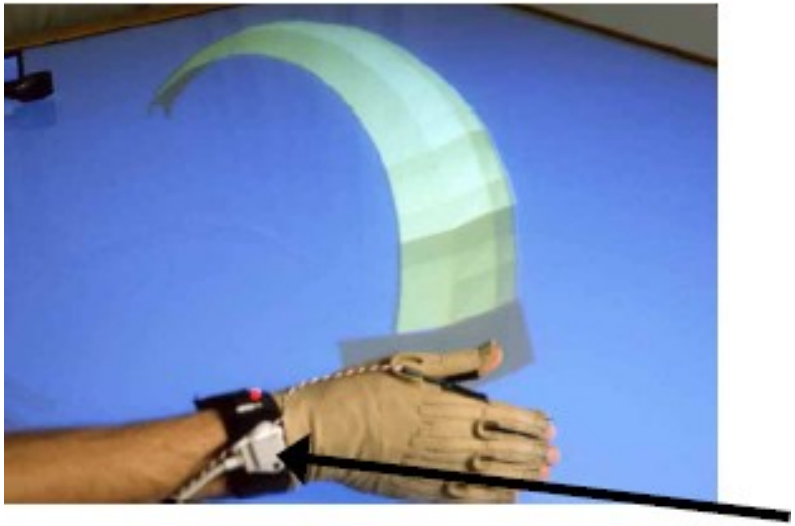

data gloves use different methods to sense the angles of finger joints:

- piezzo sensors (cyber glove)
- glass fiber (5DT data glove)
- conducting ink (power glove)
- Accelerometers

in most applications data gloves are connected to a tracking system to detect wrist position in space

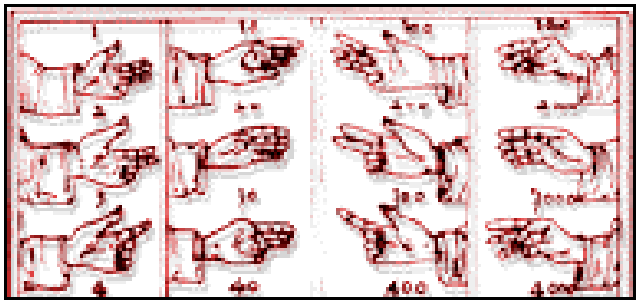

A library of gestures are defined to control applications.

source: “Surface Drawing: Creating Organic 3D Shapes with the Hand and Tangible Tools”, S. Schkolne, M. Pruett, P. Schröder

3D Position Tracking

mechanical :

The tracked object is linked by a kinematic system to a fixed point. By means of angle and length sensors, position and orientation can be tracked.

optical :

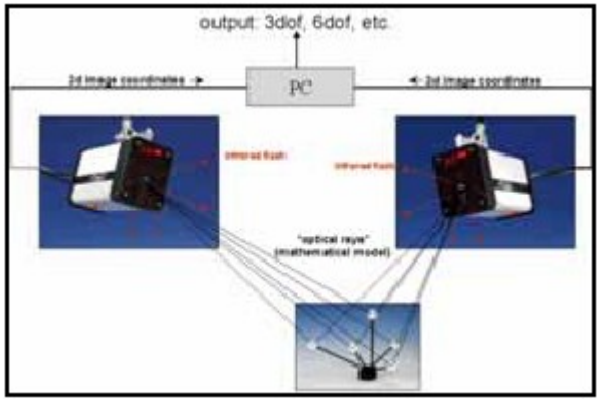

At least three reflecting markers are attached to an object. These markers reflect infrared flashes. Through this position and orientation can be tracked.

ultrasonic :

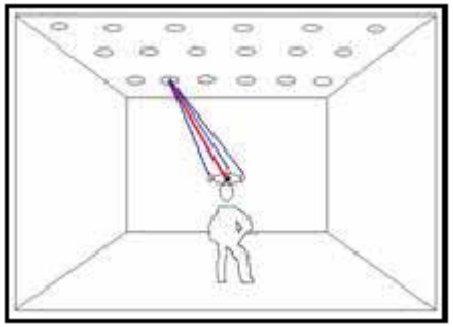

At least two emitters emit sound of different frequencies. The delay between emitting and receiving can be detected.

electromagnetic :

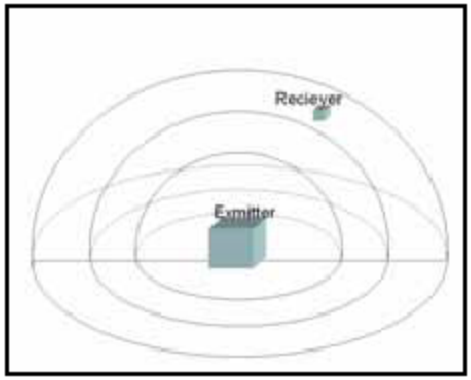

By means of an electromagnetic field, position and orientation can be detected.

Output Devices

head mounted display (HMD)

see through glasses

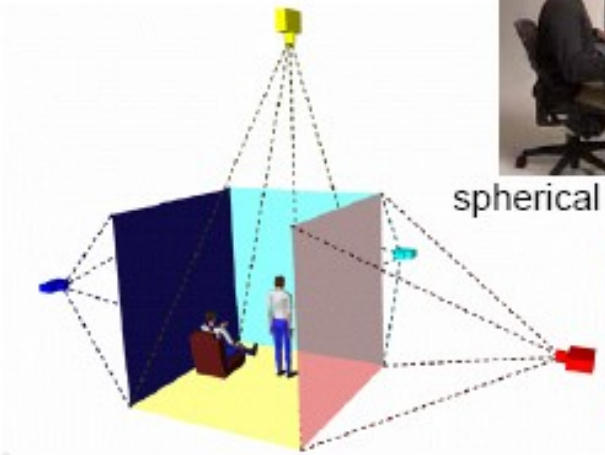

Cave

spherical projection

Powerwall

Desktop VR

haptic (force feedback) devices

projection table

Projection Table

- one of the first projection-based large volume displays
- several viewers wearing active glasses can see 3D objects floating on top of the workbench in a stereo viewing cone
- one projector (beamer) for active stereo
- two projectors for passive stereo

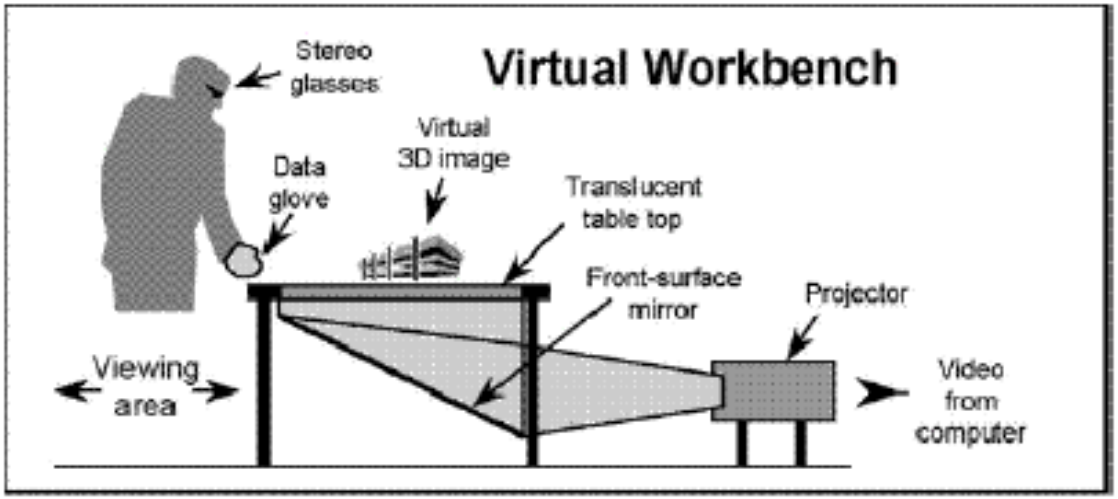

source: Rosenblumet al, "The Virtual Reality Responsive Workbench: Applications and Experiences", Proc. British Computer Society Conference on Virtual Worlds on the WWW, Internet, and Networks, Bradford, UK, April 1997.

Powerwall

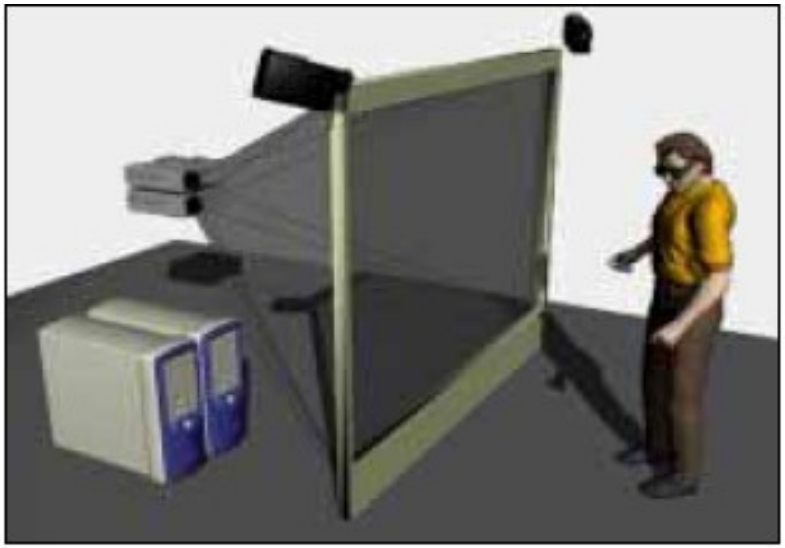

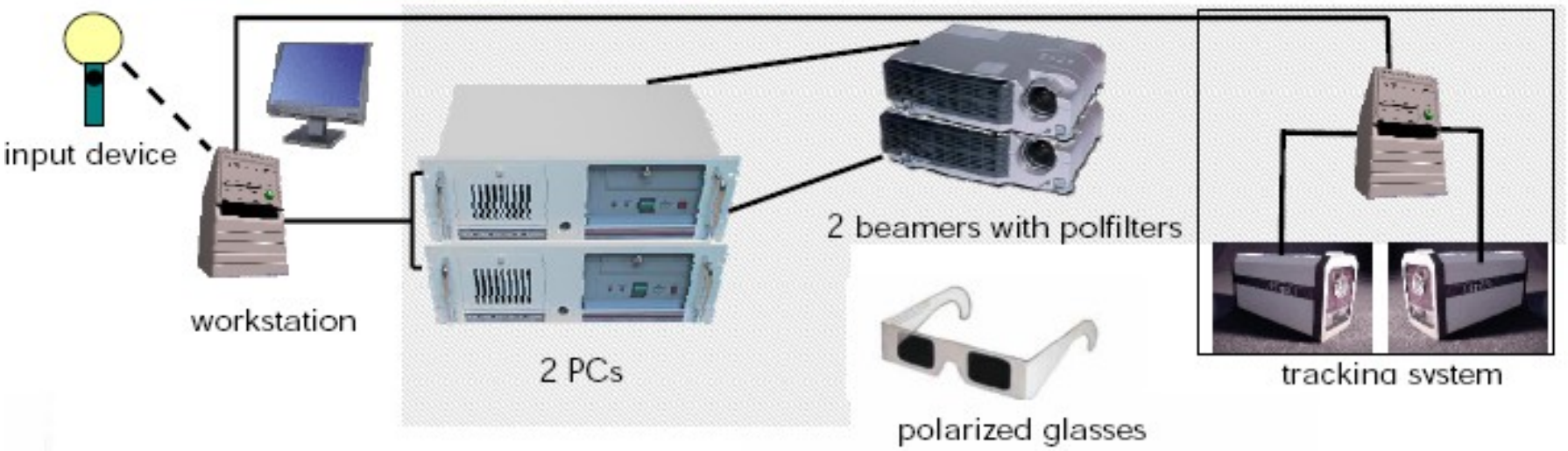
input device
workstation
2 PCs
2 beamers with polfilters
polarized glasses
tracking system

Example –Powerwall and optical tracking

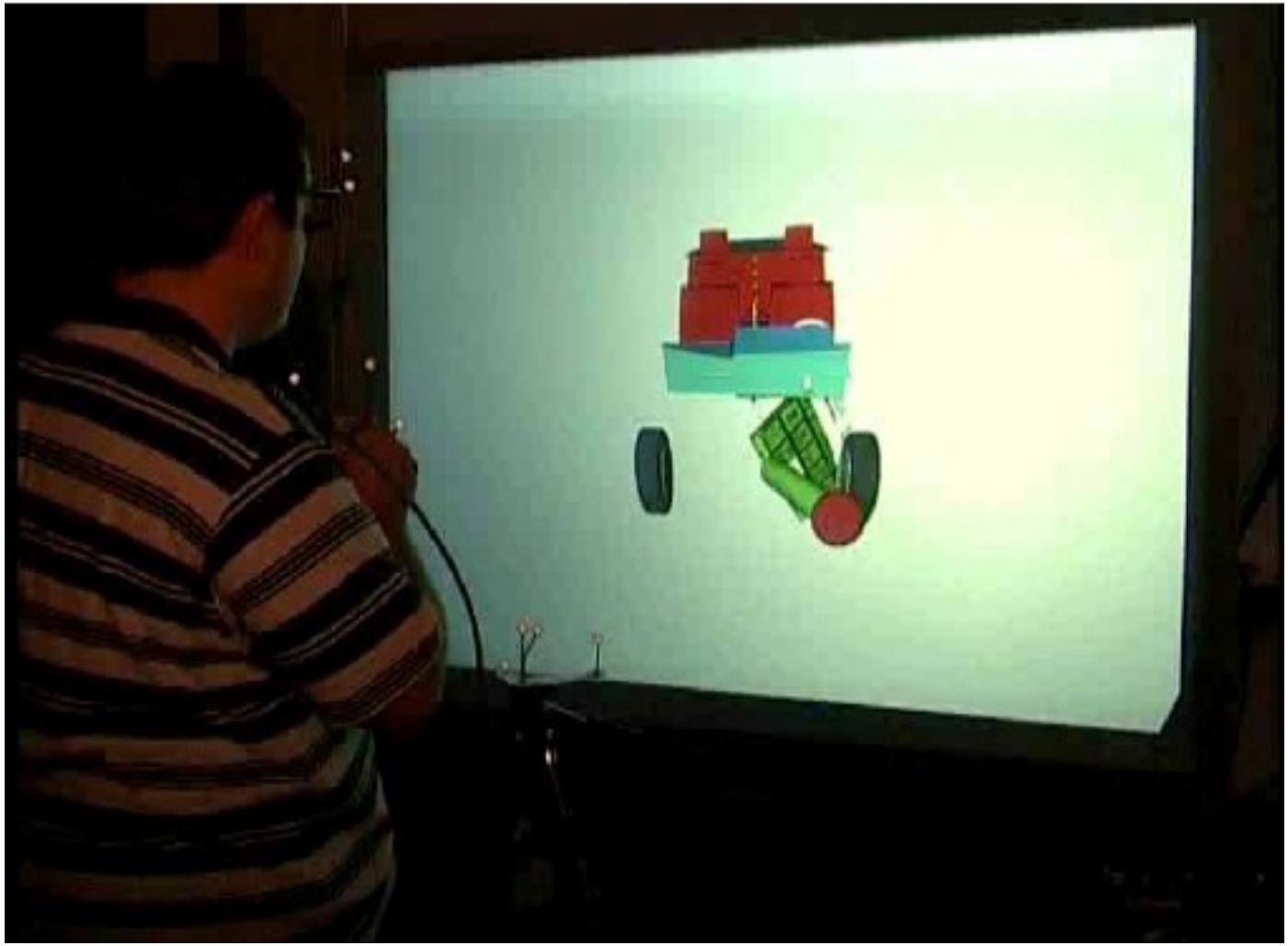

SketchAR

Spherical Projection

special lenses for spherical projection

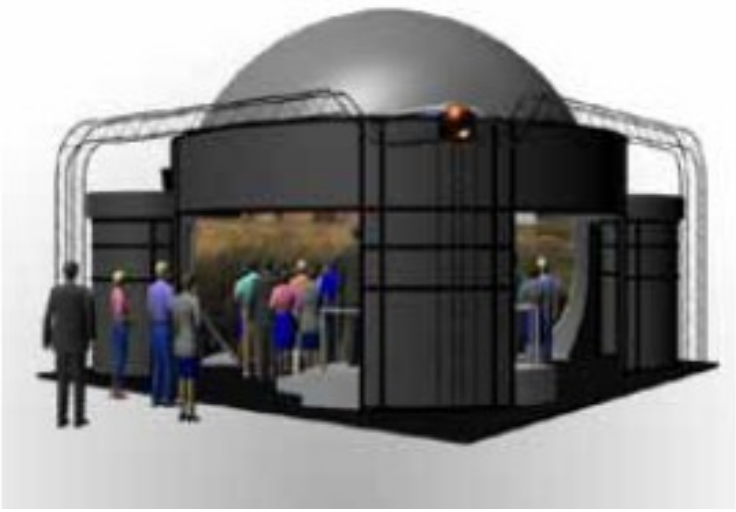

Visionstation

- one cybernaut
- no need to wear goggles or glasses
- parabolic mirror
- fully immersive display of 160°

- Visiondome
- 360° projection on the interior of a dome
- 180° field of view
- hemispherical screen is tilted from 0 to 90 degrees for viewing ease

CAVE

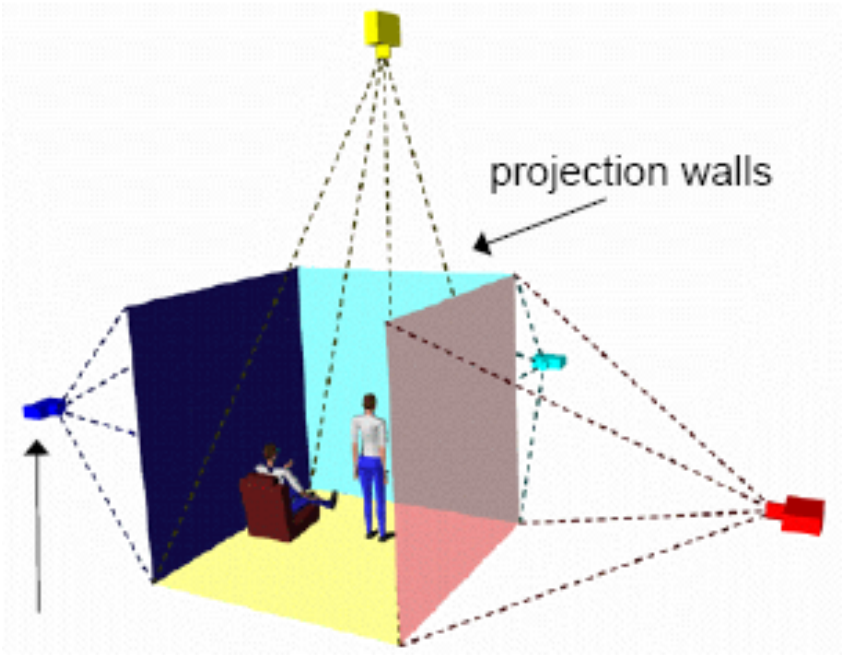

- projector-based display
- up to six projection walls are used to visualize 3D worlds
- often combined with surround sound and tracking systems
- pros: high immersion, designed for up to about 12 cybernauts
- cons: very expensive (about 1.000.000 €), needs a lot of space

two beamers per channel

blue-c, ETHZ, CH

HeadMountedDisplays (HMD)

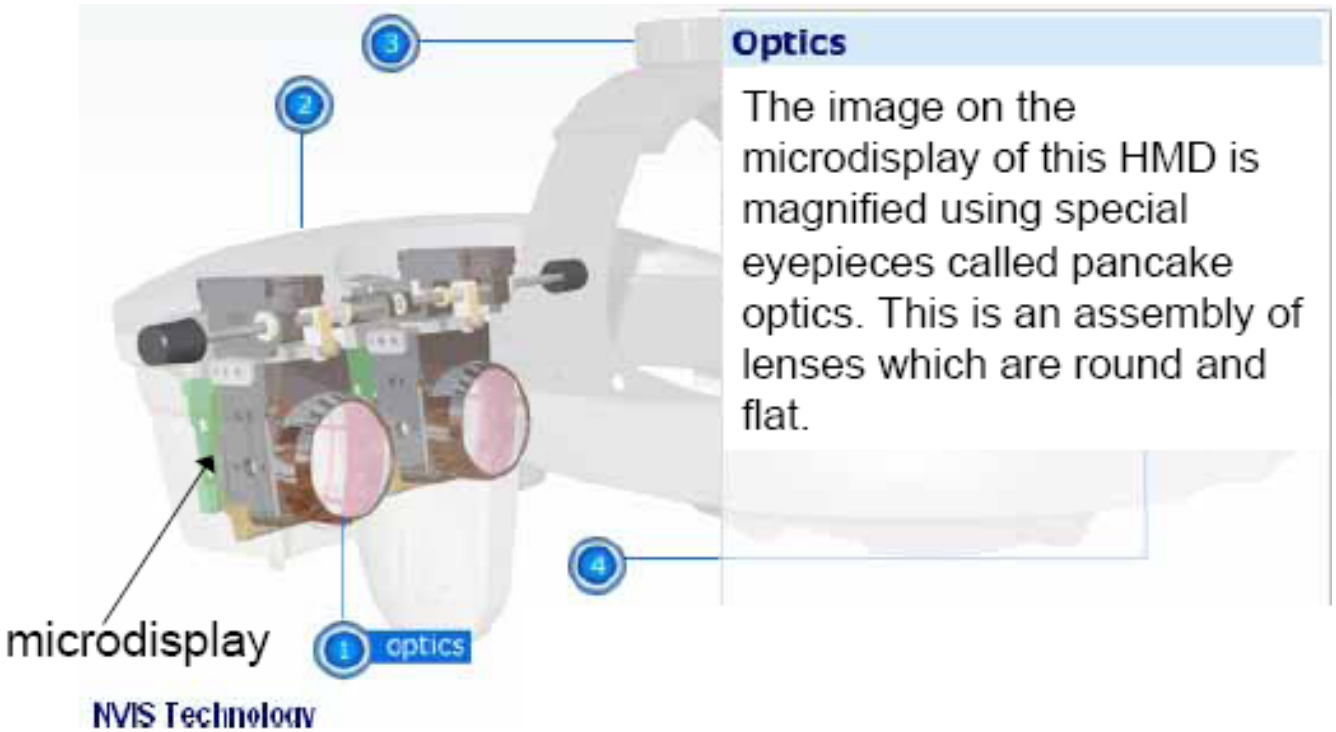

Head Mounted Displays (HMD) use two monitors that are directly mounted in front of the eyes. A tracking system detects position and orientation of the head. With this data the computer calculates the stereo view. They can have resolutions from 160 * 80 up to 1280*960.

Desktop VirtualReality(VR)

- use of Virtual Reality with standard PCs
- standard output devices include shutter glasses or autostereoscopic displays
- autostereoscopic displays use prisms to generate the different perspectives for the left and right eyes
- pros: relatively inexpensive, VR right at one's desk
- cons: with autostereoscopic displays the head must be inside the focus of the prisms, resolution can be insufficient

shutter glasses

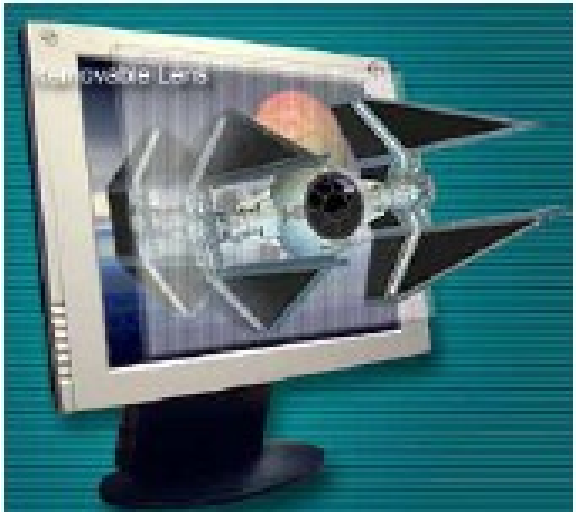

autostereoscopicdisplay

Haptic Interface Examples

Cybertouch

simulates only touch feedback through vibrating actuators

Haptic Workstation

force feedback, each finger is connected to a cable winch

Phantom Desktop

small, integrated actuators in the joints simulate the force feedback

4.4 Key Issues

- visualization appropriate for the phase of product development
  - discrepancy between creating a “virtual prototype” and representing the level of imprecision in a current design
- improved visualization and graphics capabilities on “average” hardware
- data exchange between CAD models and VR devices
- human factors associated with VR and AR applications
  - there is often a time on how long users can work with VR devices
  - time required to learn how to use new devices
- general effectiveness of VR and AR devices
- relation between cost investment of VR and AR and benefits achieved

4.5 Summary

- The main goal of using computer visualization in product development is to improve communication and understanding of ideas, problems and solutions.
- Most engineering companies today rely on 3D graphical visualization in Cax tools daily.
- Visualization functionality will continue to expand and take advantage of increasing computing power and display technology.
- Interfaces (GUIs) and modes of interaction with Cax tools have developed in-line with visualization capabilities.
- Virtual reality (VR) enables users to immerse themselves in virtual worlds, interact with virtual worlds using further sensory channels than vision alone and imagine being part of virtual worlds.
- Augmented reality (AR) enables virtual information to be integrated with the real world to help users perform tasks in real life.
- Haptic feedback conveys touch or force information that helps users achieve tactile identification of virtual objects to better interact with and manipulate virtual objects.

4.6 Further Reading

- *Das virtuelle Produkt: Management der CAD-Technik, Chpt. 4.3, Spur and Krause, Hanser, 1997.*
- *Produktinnovation: StrategischePlanungund EntwicklungderProduktevon morgen, Chpt. 5., Gausemeier, Ebbesmeyer, Kallmeyer, Hanser, 2001.*
- *Introduction to Computer Graphics, Foley, VanDam, Feiner, Hughes and Phillips, Addison-Wesley Publishing Company, Inc., 1994.*
- *Principles of CAD/CAM/CAE, Chpt. 3, Systems, K. Lee, Addison-Wesley, 1999.*
- *Virtual Reality Technology, 2ndedition, G.C. Burdeaand P. Coiffet, John Wiley, 2003.*