LEHIGH UNIVERSITY

Center for Optical Technologies

Image Fusion

Prof. Rick S. Blum

ECE Department

Lehigh University

Outlines

- Introduction to Image Fusion
- Current Image Fusion Research At Lehigh University
  - Image Registration, Fusion, Evaluation Toolbox
  - Color Image Fusion for Concealed Weapon Detection
  - Image Fusion Using the EM Algorithm
- Conclusions

LEHIGH UNIVERSITY

Center for Optical Technologies

Introduction to Image Fusion

Introduction to Image Fusion

- Image Sensors
  - **Optical cameras, millimeter wave (MMW) cameras, infrared (IR) cameras, x-ray imagers, radar imagers**
  - **Optimized for different operating conditions**
  - **Different characteristics of the generated image data**

Introduction to Image Fusion

- Image Fusion

  Combine images from different sources to obtain a single composite image with extended or enhanced information content

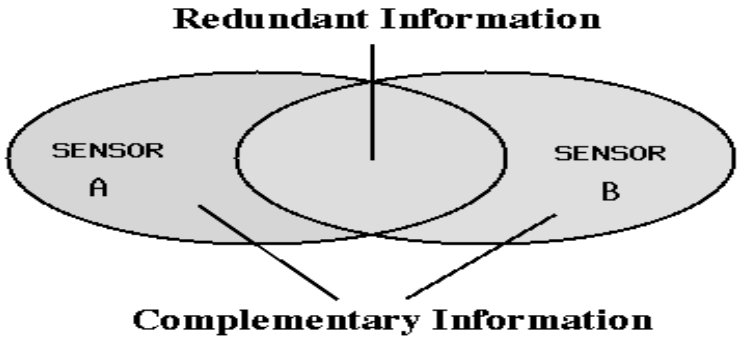

Introduction to Image Fusion

- Applications of Image Fusion
  - **Concealed Weapon Detection**
  - **Night Time Surveillance**
  - **Automatic Landing System**
  - **Digital Camera Applications**
  - **Medical Diagnosis**
  - **Defect Inspection**
  - **Remote Sensing**

Introduction to Image Fusion

- Concealed Weapon Detection

(a) Image from CCD (b) Image from MMW (c) Fused image

(The source images were obtained from Thermotex Corporation)

Introduction to Image Fusion

- Multi-Focus Image Fusion

(a) Focus on the left

(b) Focus on the right

(c) Fused image (all-focus)

Introduction to Image Fusion

- Medical Diagnosis

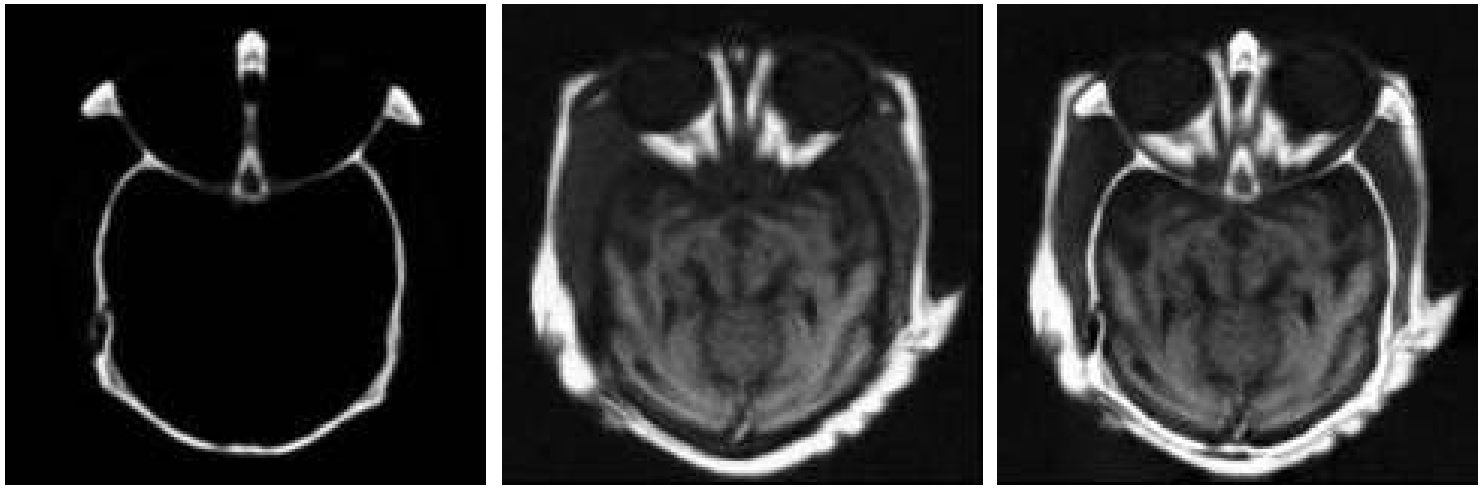

(a) CT image (b) MRI image (c) Fused image

LEHIGH UNIVERSITY

Center for Optical Technologies

Image Registration, Fusion, Evaluation Toolbox

LEHIGH UNIVERSITY

Center for Optical Technologies

Image Registration, Fusion, Evaluation Toolbox

- Registration: geometric transformations to align one image to another
- Fusion : combine source images to obtain a more accurate description of the scene
  - Still images (TIF, BMP, JPEG, etc.)
  - AVI videos
- Histogram optimization: linear stretching of the intermediate gray level pixels to specified endpoints
- Evaluation: fusion algorithms comparison, image quality metrics development

Toolbox Framework

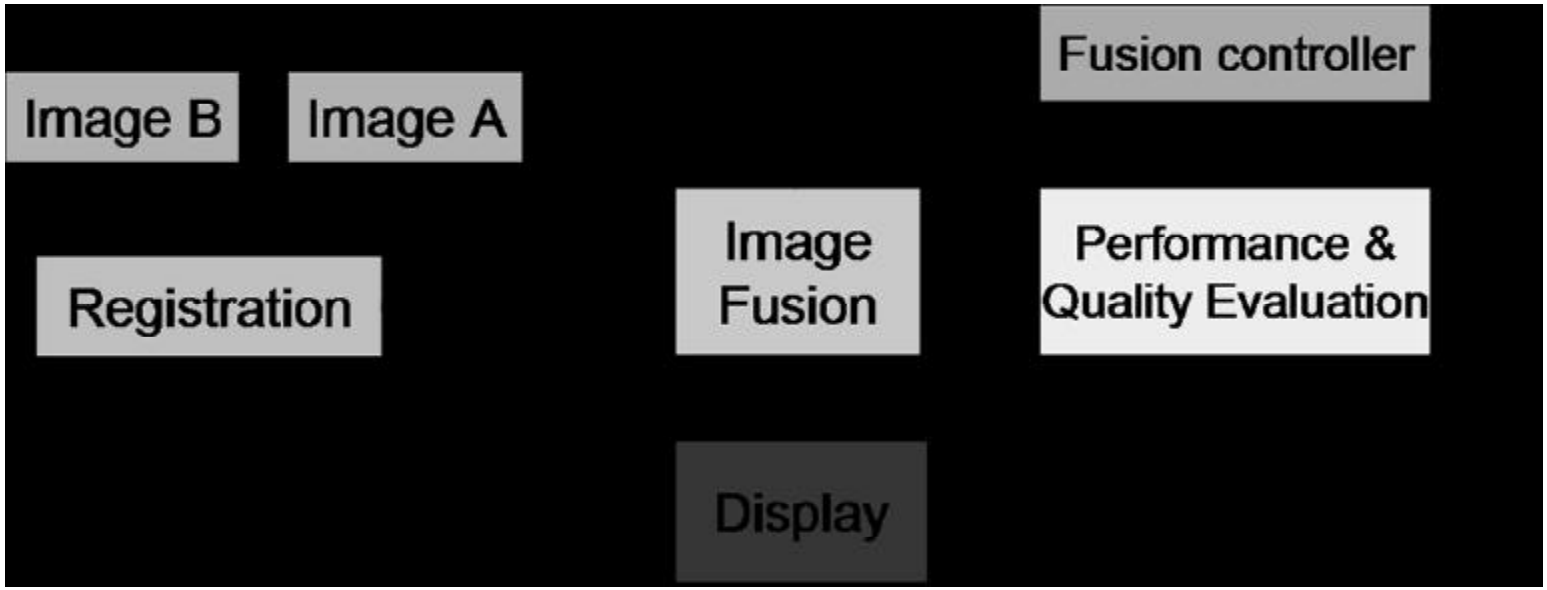

LEHIGH UNIVERSITY

Center for Optical Technologies

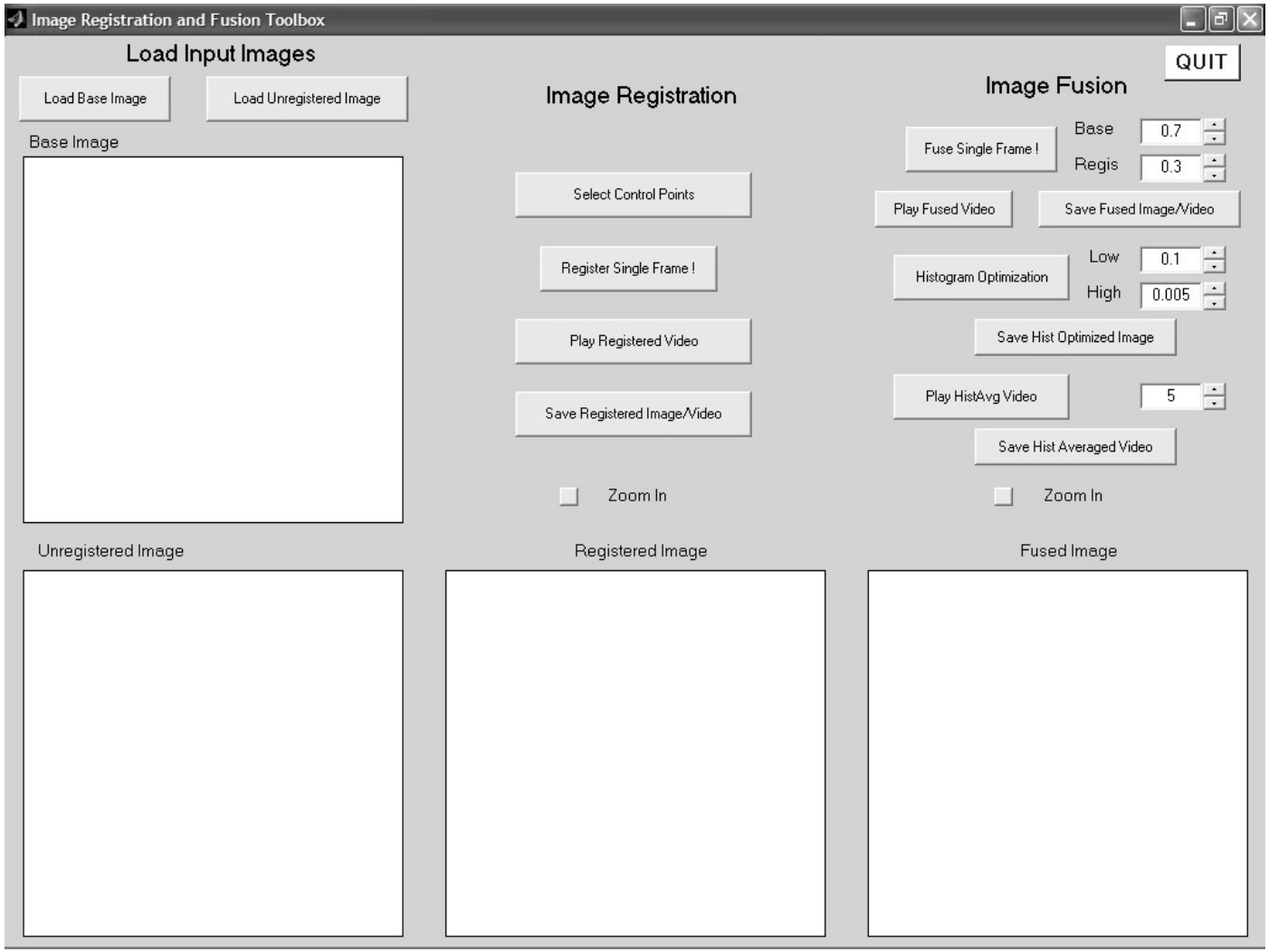

Control Point Selection Tool
File Edit View Help
Input Detail: Unregistered
100%
Lock ratio
100%
Base Detail: Base
Input Overview: Unregistered
58%
Lock ratio
58%
Base Overview: Base

LEHIGH UNIVERSITY

Center for Optical Technologies

Image Registration Example

Base

Registered

Unregistered

LEHIGH UNIVERSITY

Center for Optical Technologies

Fusion Algorithms to be Evaluated

- Additive
- Laplacian pyramid
- FSD pyramid
- Morphological pyramid
- Gradient pyramid
- DWT
- SIDWT
- EM algorithm

Fusion Algorithms Evaluation

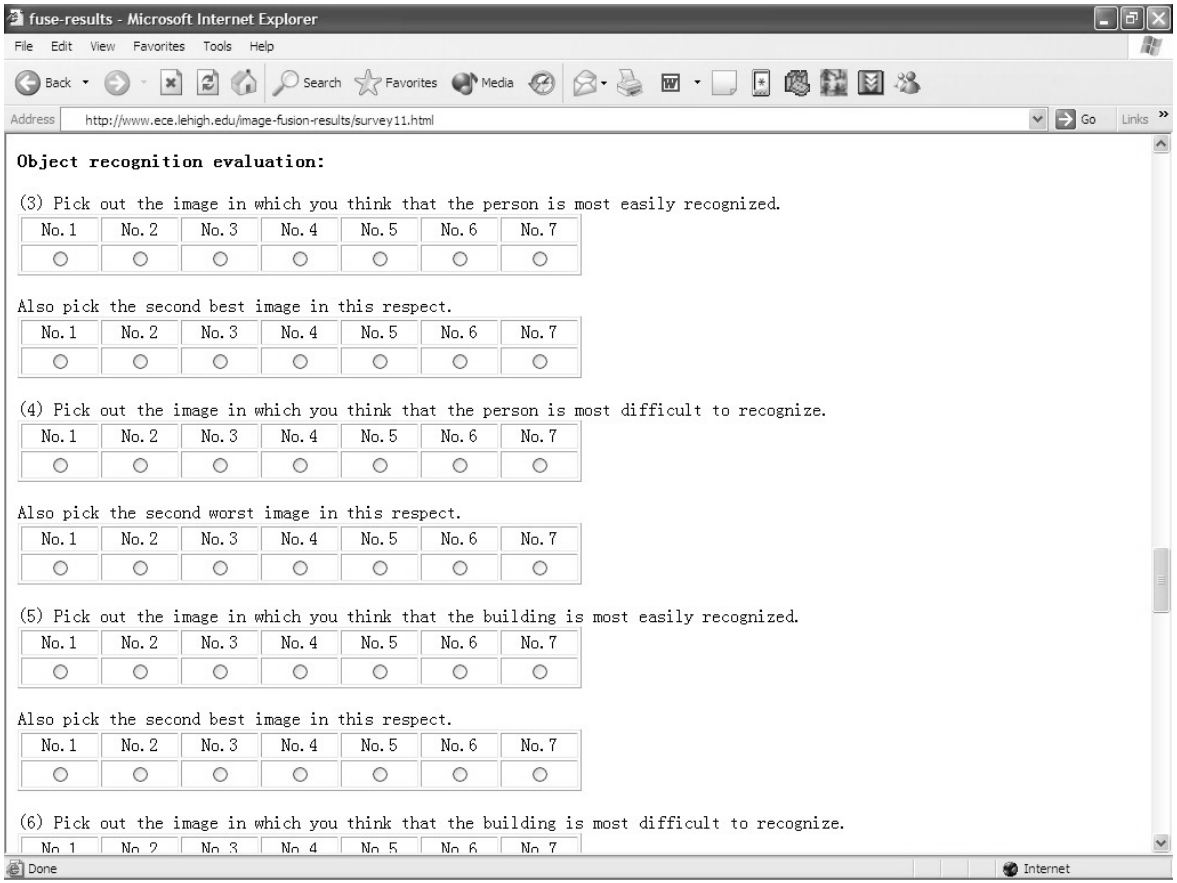

Image Quality Metrics

- Edge sharpness level
- SNR estimation
- Local histogram analysis
- Distance measure for detecting objects
  - Bhattacharyya distance
  - Kullback Leibler distance (KLD)
- Information based measure

LEHIGH UNIVERSITY

Center for Optical Technologies

Edge Intensity Image Analysis

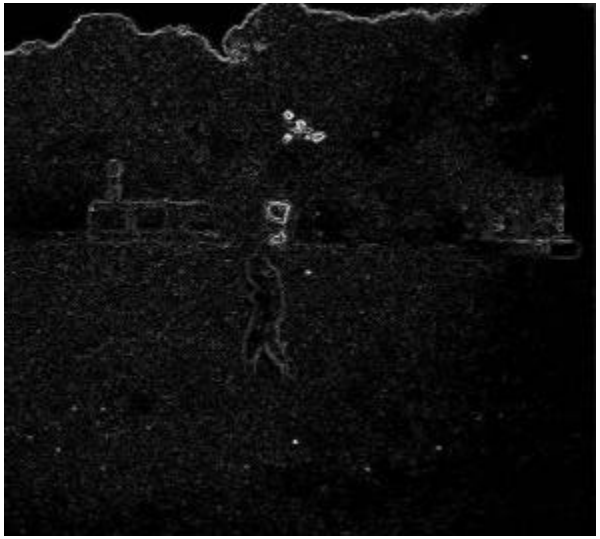

Additive Fusion Edge

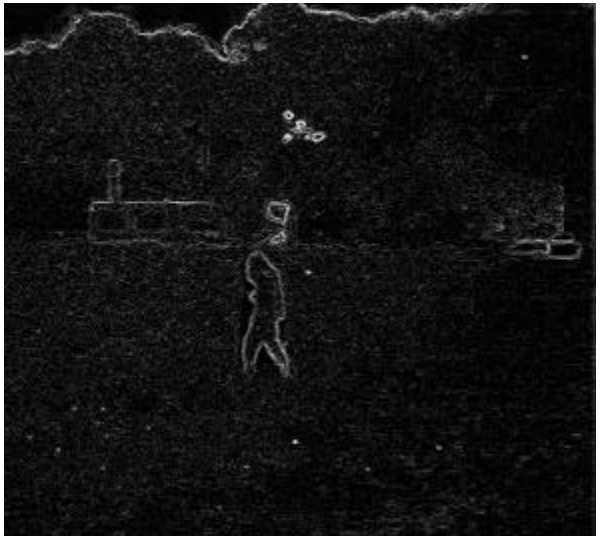

DWT Fusion Edge

EM Fusion Edge

General Image Quality Metrics

- Applied for night vision image fusion
- No reference image (blind)
- Generalization
- Objective
- Utilized for adaptive fusion

LEHIGH UNIVERSITY

Center for Optical Technologies

Color Image Fusion for Concealed Weapon Detection

Color Image Fusion

- Objective:
  - **Develop a new technique to fuse a color visual image with an MMW/IR image for the CWD**
  - **Fused image should have both**
    - **high resolution & natural color of visual image**
    - **weapon detected by MMW/IR sensor**

LEHIGH UNIVERSITY

Center for Optical Technologies

Color Image Fusion

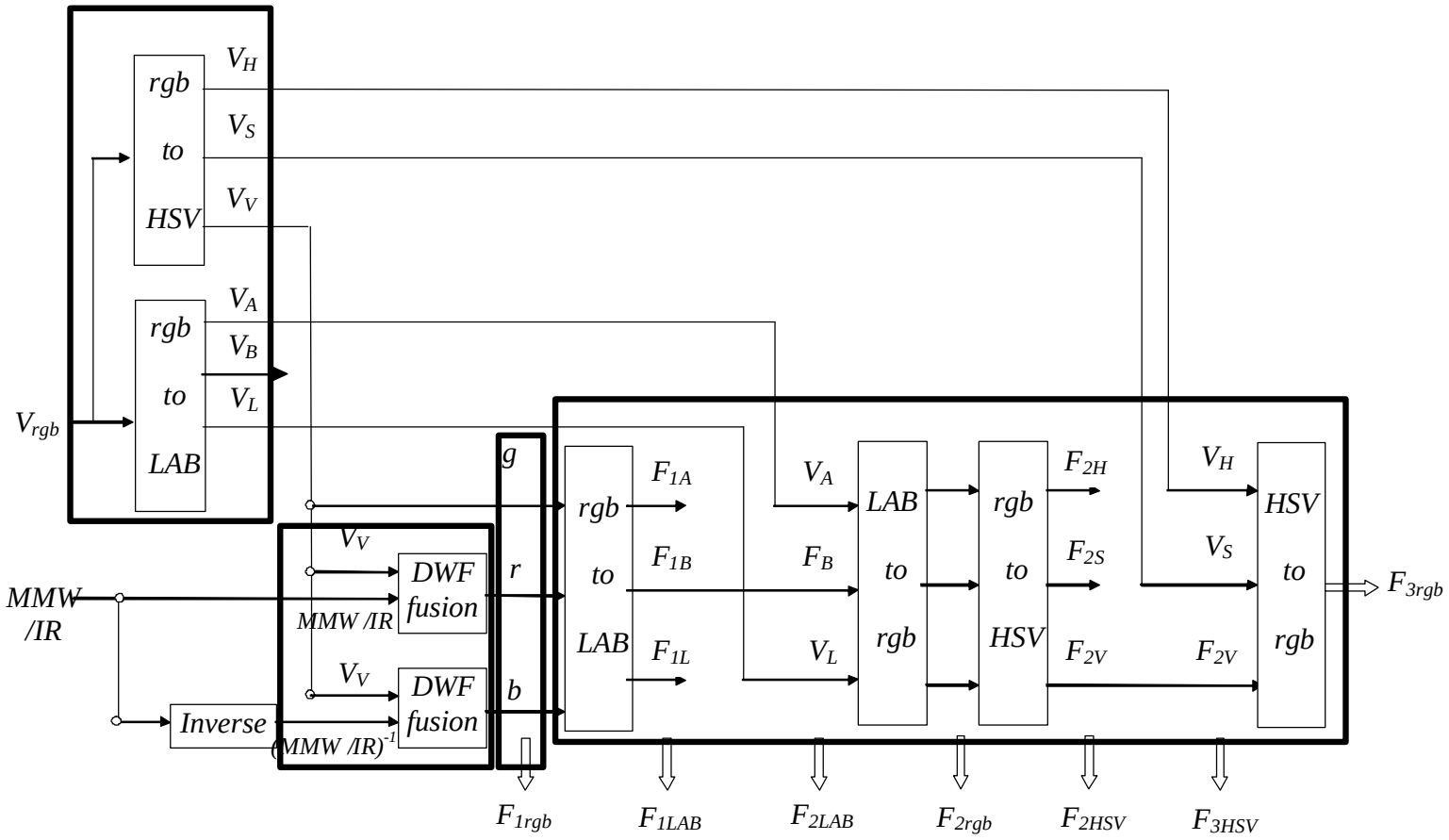

LEHIGH UNIVERSITY

Center for Optical Technologies

Color Image Fusion

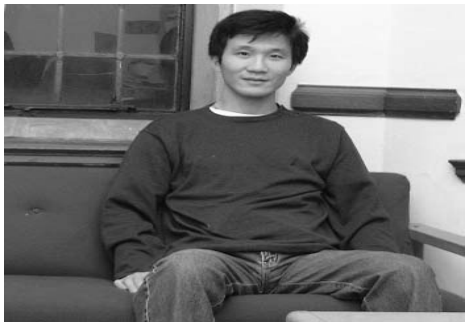

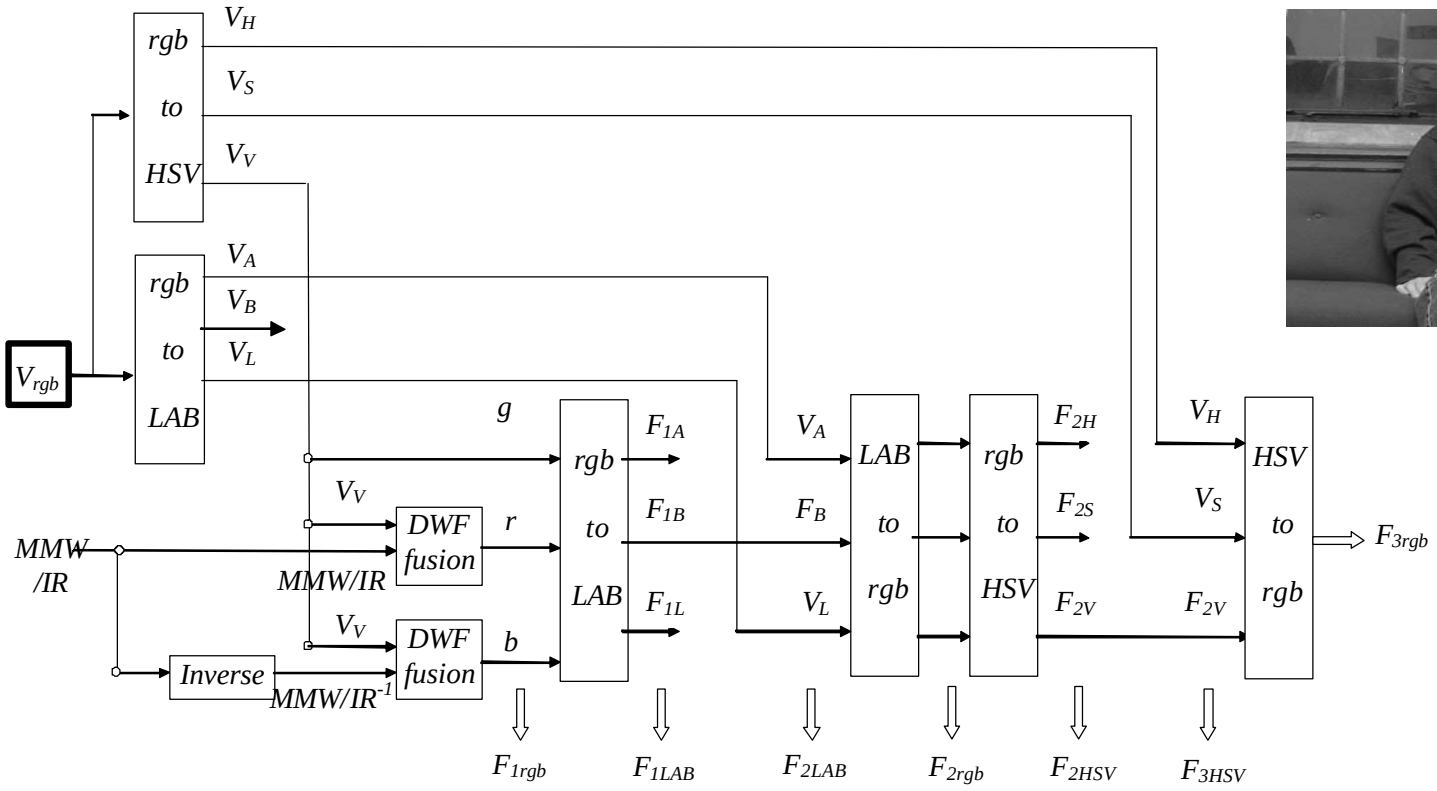

LEHIGH UNIVERSITY

Center for Optical Technologies

Color Image Fusion

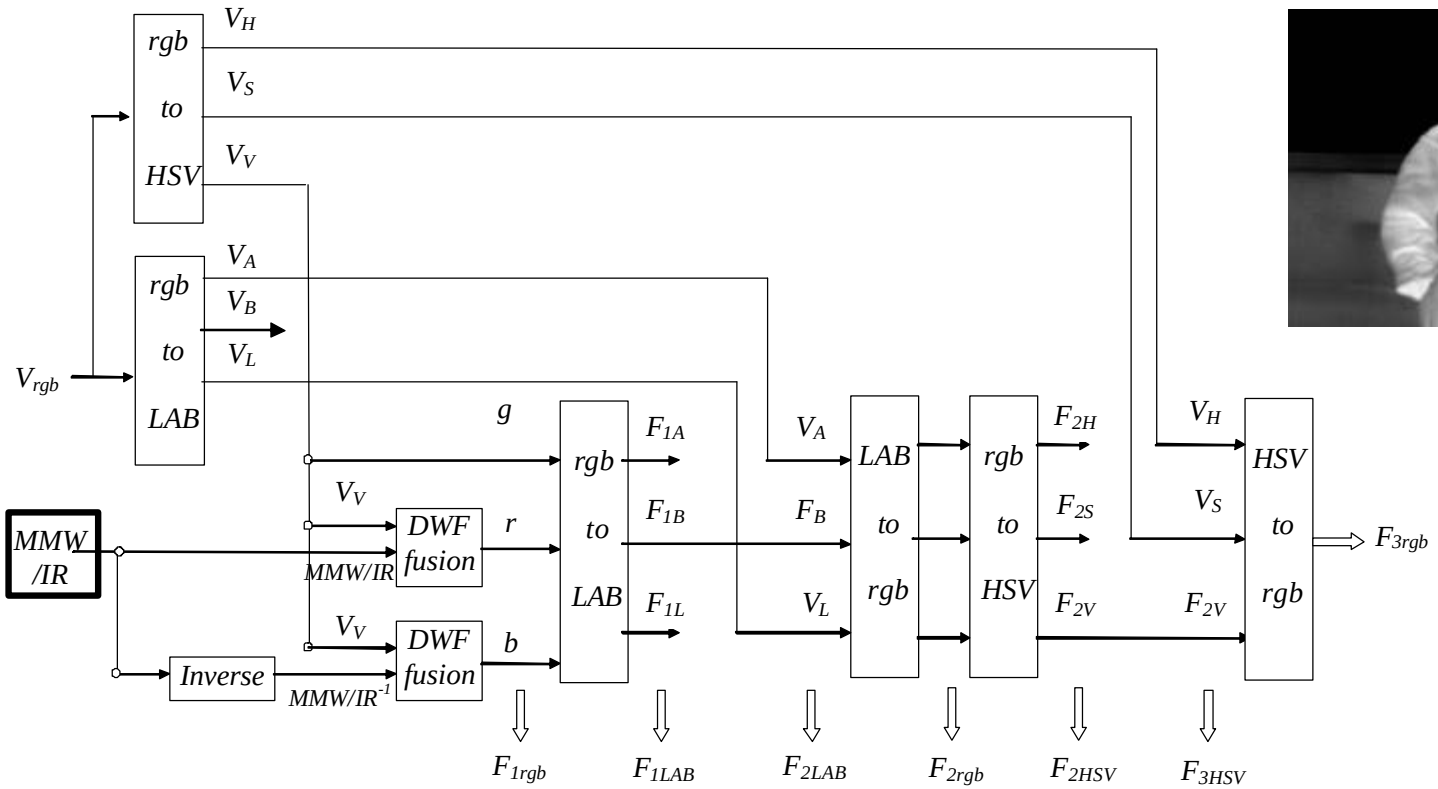

LEHIGH UNIVERSITY

Center for Optical Technologies

Color Image Fusion

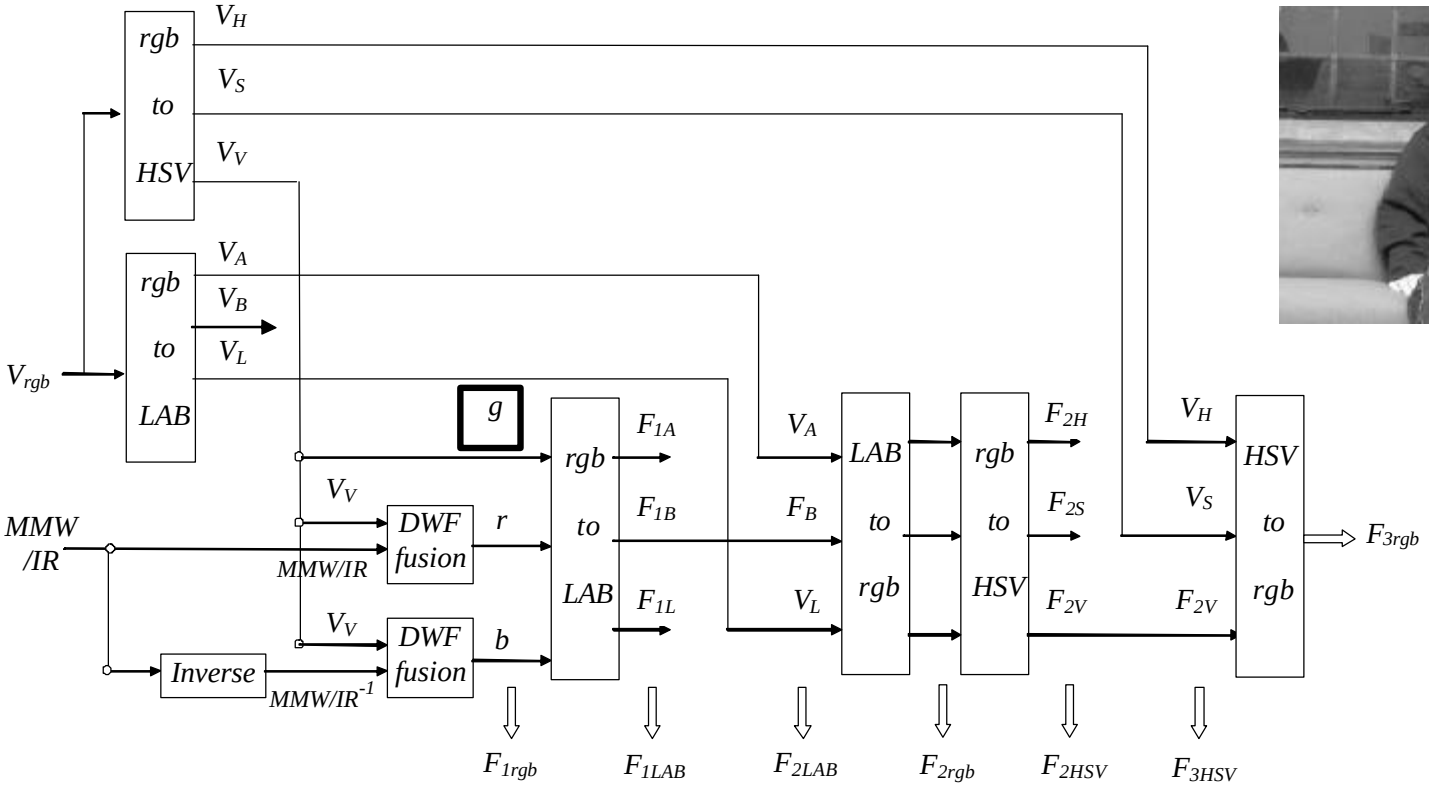

Color Image Fusion

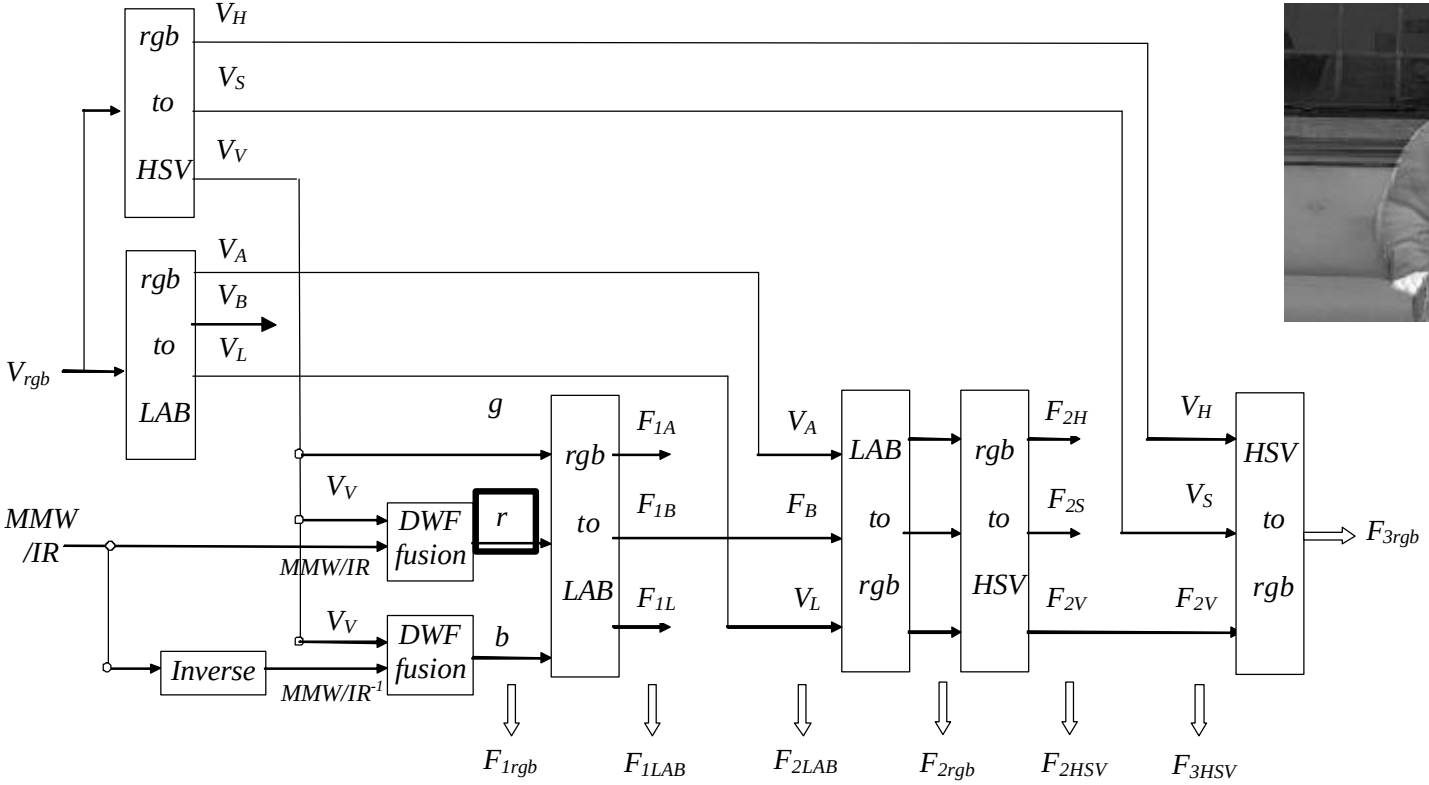

LEHIGH UNIVERSITY

Center for Optical Technologies

Color Image Fusion

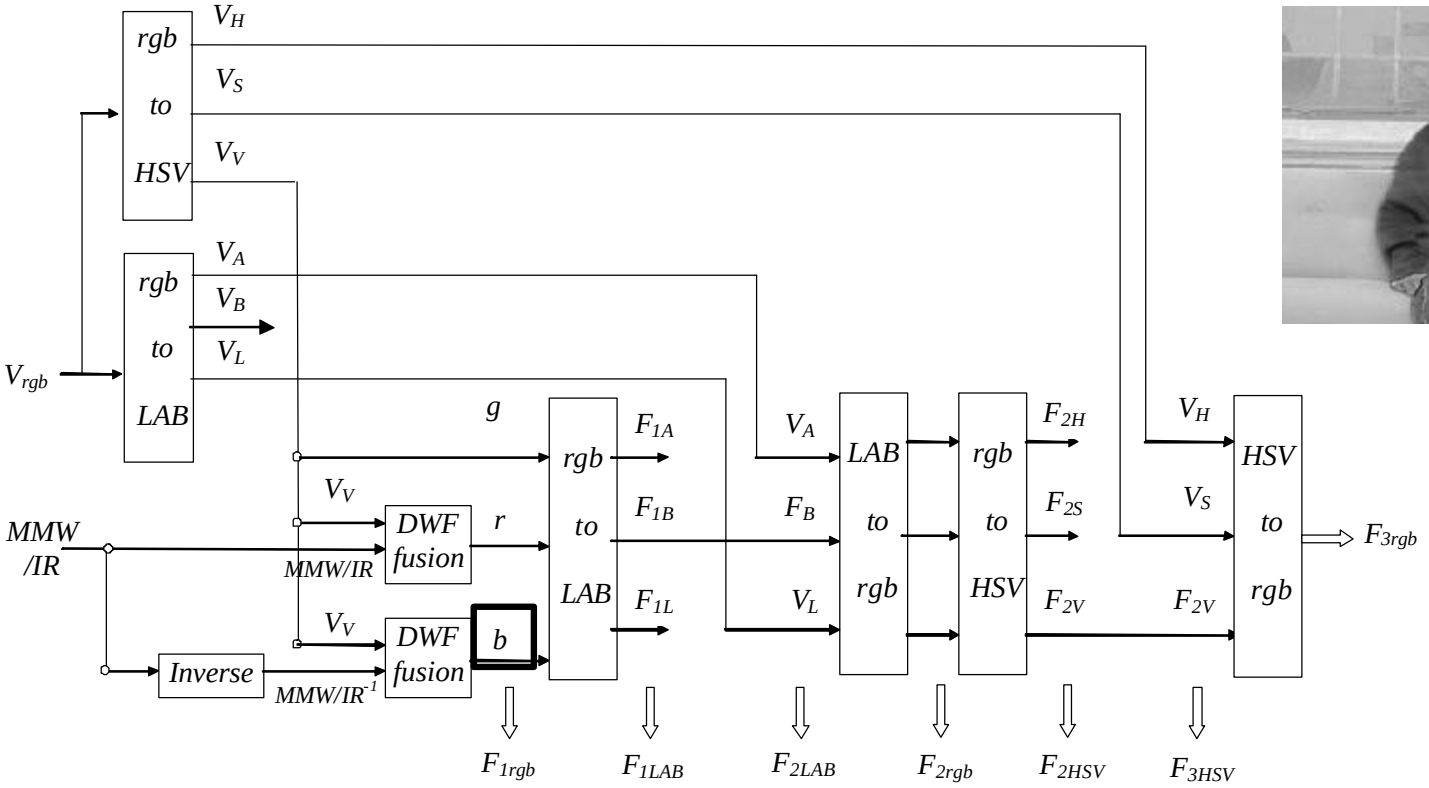

LEHIGH UNIVERSITY

Center for Optical Technologies

Color Image Fusion

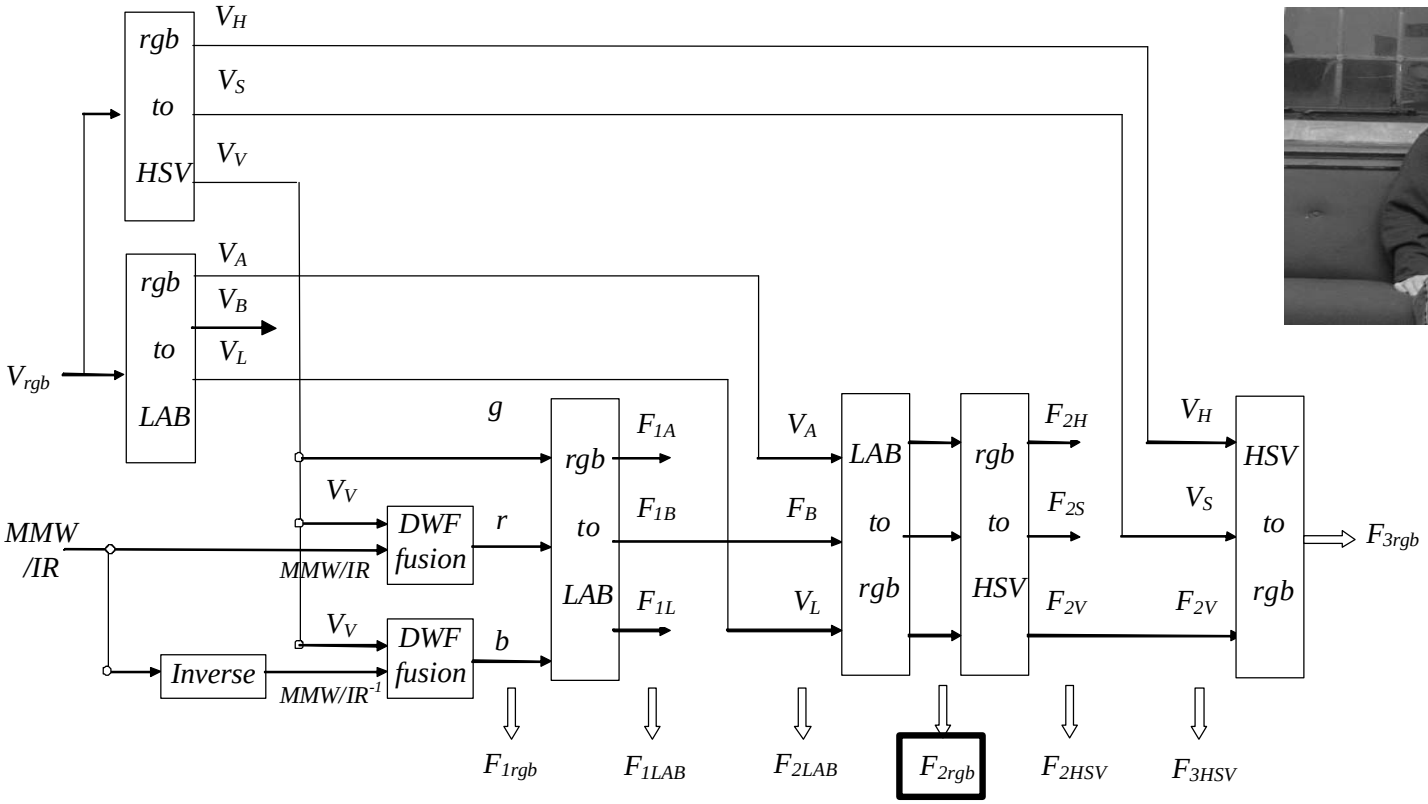

LEHIGH UNIVERSITY

Center for Optical Technologies

Color Image Fusion Algorithm

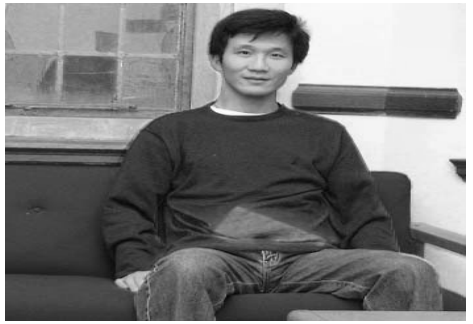

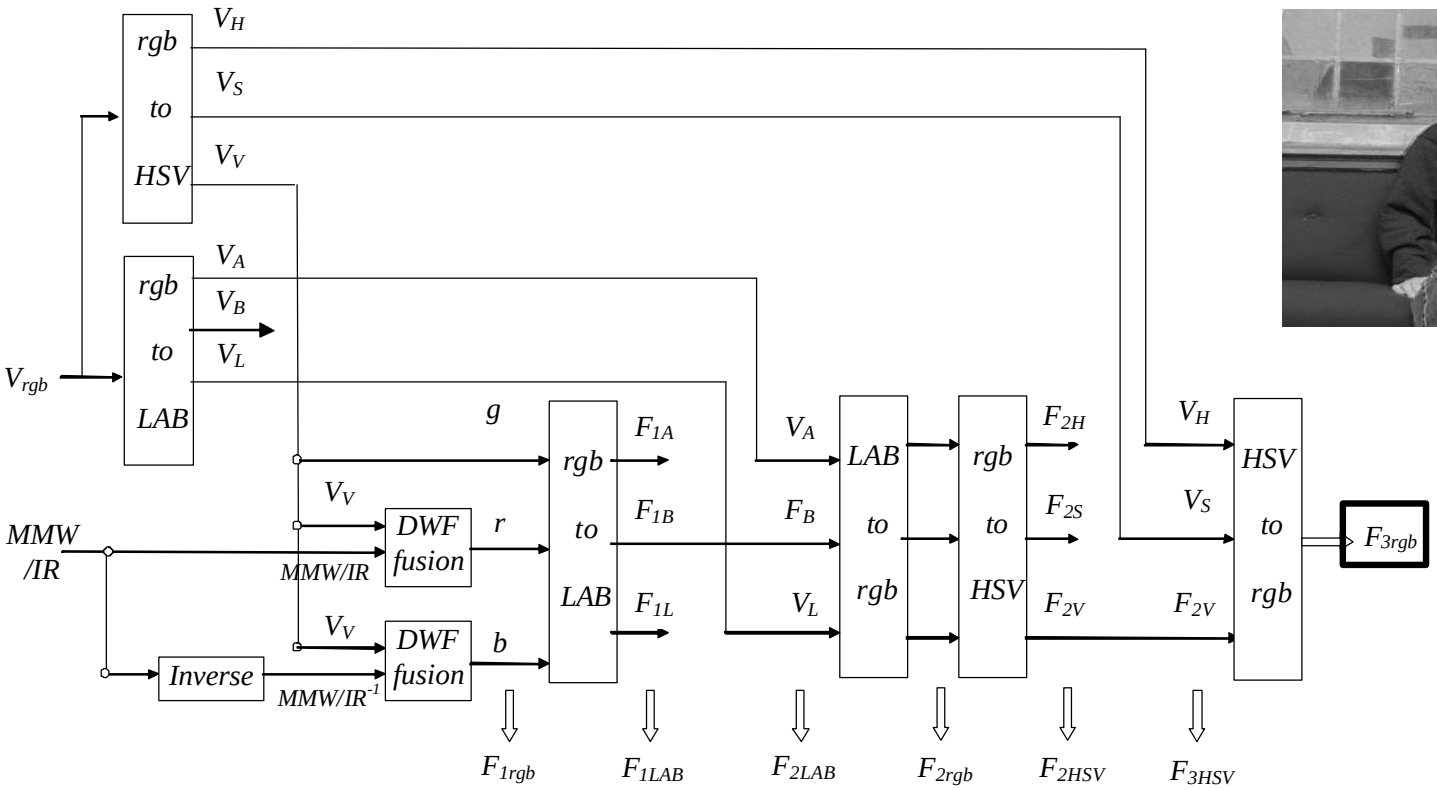

LEHIGH UNIVERSITY

Center for Optical Technologies

Color Image Fusion Algorithm

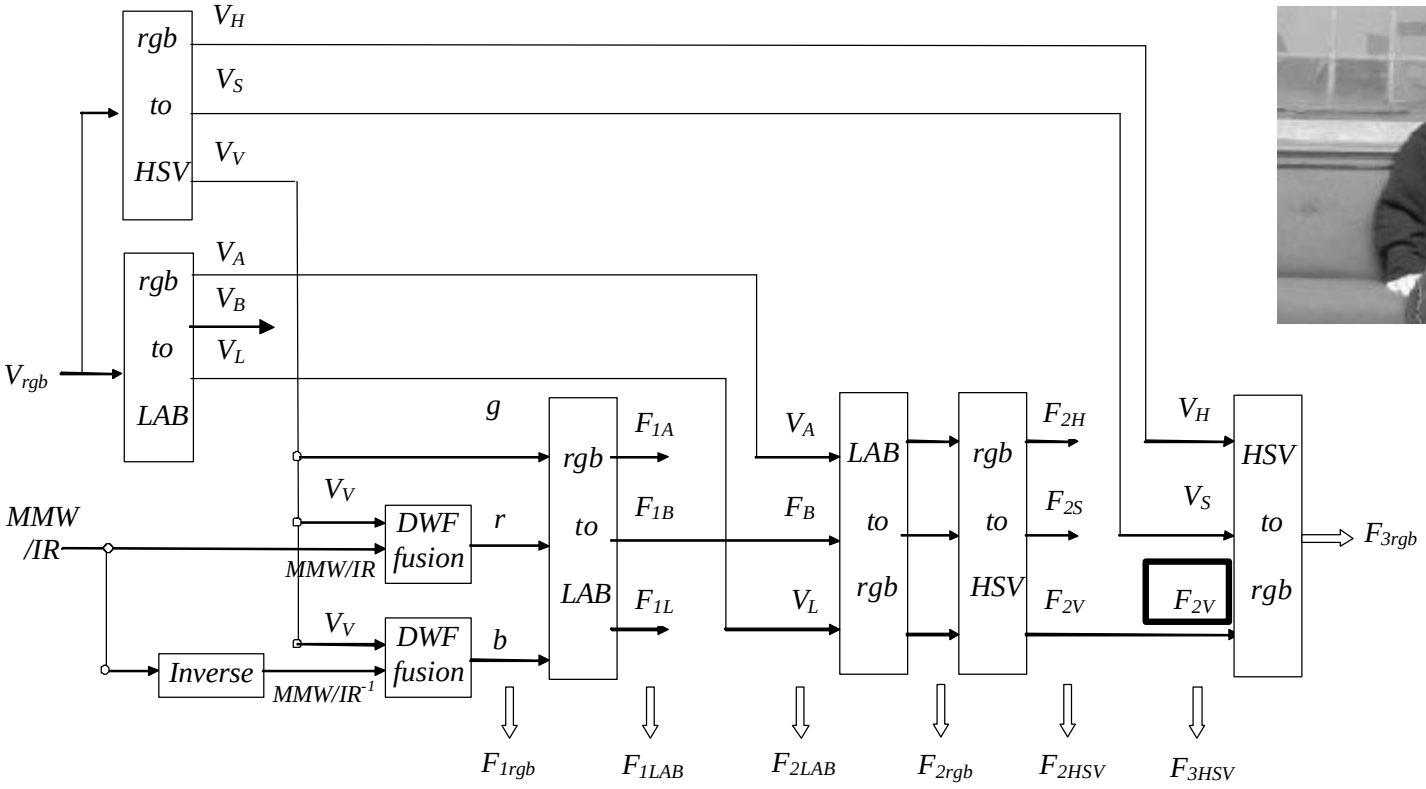

Color Image Fusion

- Experimental Tests

(a) Visual image

(b) IR image

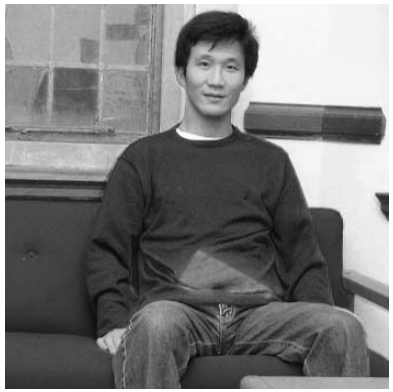

(c) Fused image

Color Image Fusion

- Experimental Tests

(a) Visual image

(b) IR image

(c) Fused image

Color Image Fusion

- Experimental Tests

(a) Visual image

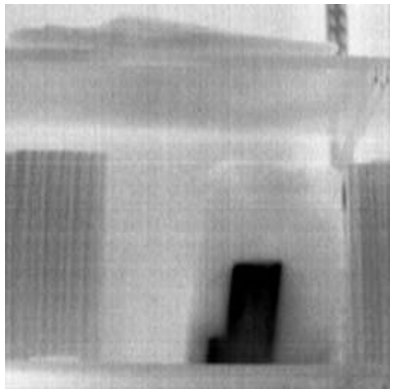

(b) IR image

(c) Fused image

Color Image Fusion

- Experimental Tests

(a) Visual image

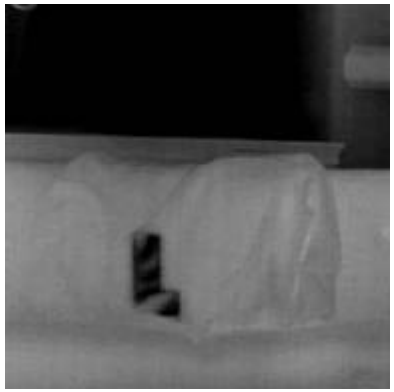

(b) IR image

(c) Fused image

Color Image Fusion

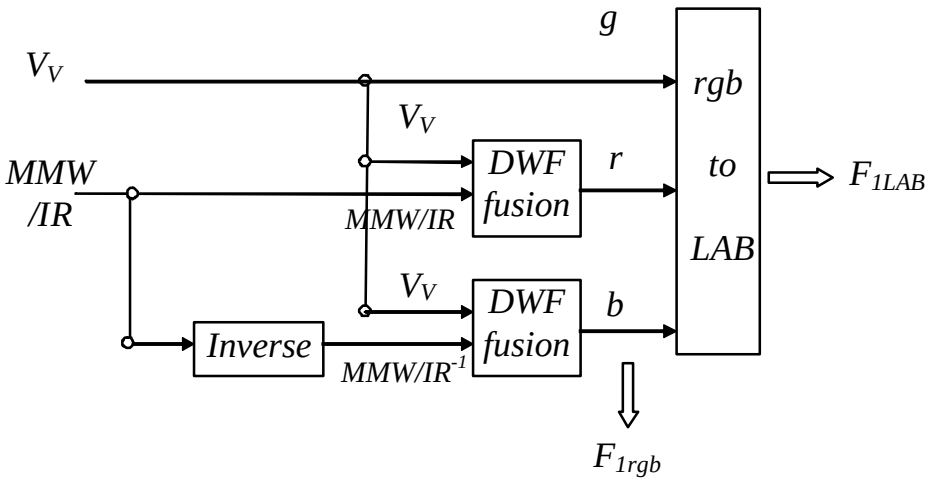

Color Image Fusion

- Experimental Tests

(a) Intensified image

(b) thermal midwave image

(c) Fused image

Color Image Fusion

- Experimental Tests

(a) low-light television image

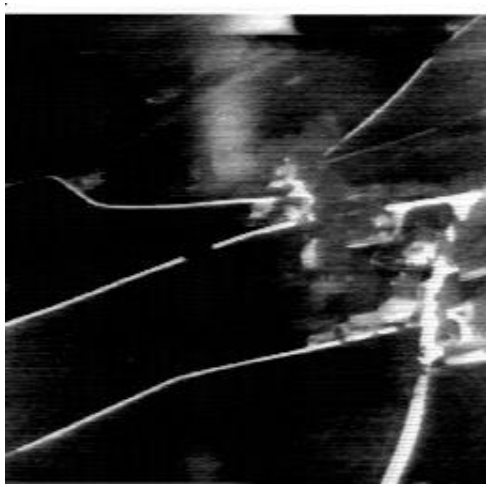

(b) FLIR image

(c) Fused image

LEHIGH UNIVERSITY

Center for Optical Technologies

Image Fusion

Using the EM Algorithm

Basic Idea

- Attempt to capitalize on the well developed theories of statistics and estimation theories
- Attempt to explore the model-based image fusion using hidden Markov models (HMM)
- The fusion method is based on an image formation model
- The image formation model is built on some multiscale transform
- The fused image comes from a maximum-likelihood estimate by Expectation-Maximization (EM) algorithm

Multiscale Image Fusion

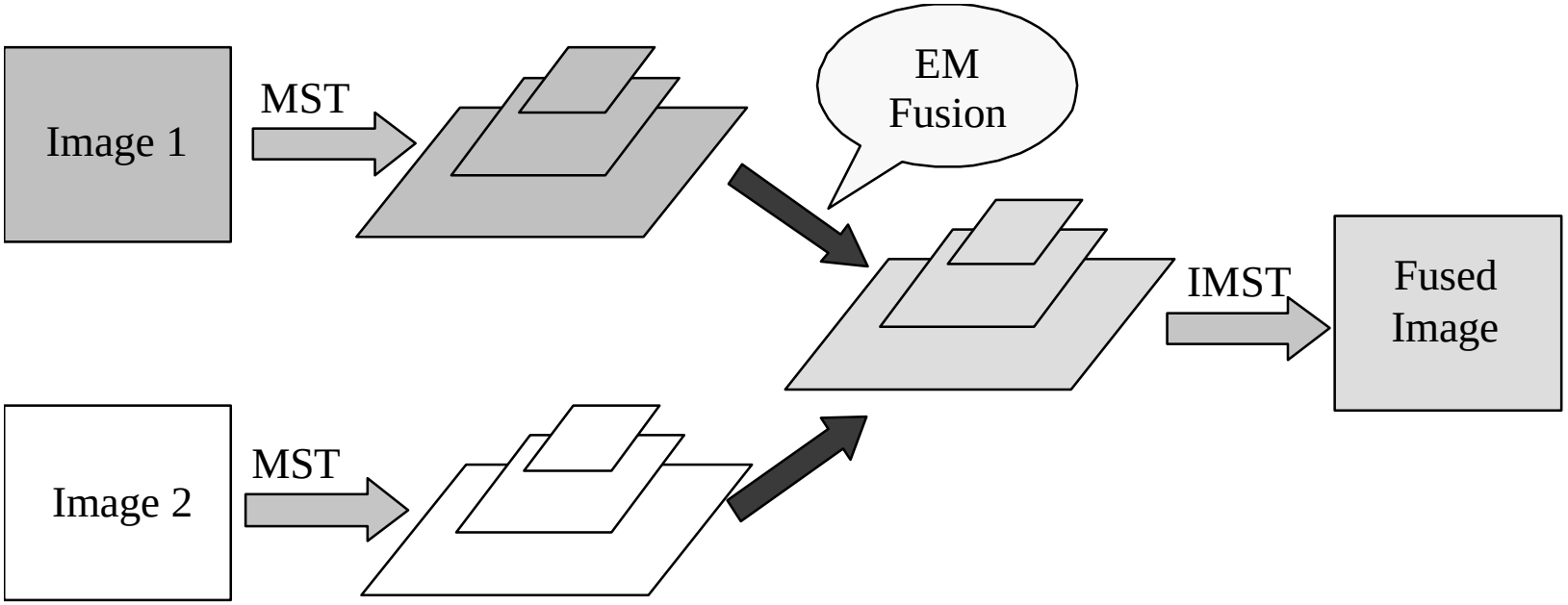

MST: Wavelet transforms, Laplacian transforms, etc.

EM Fusion: Fusion with the EM algorithm based on some image models.

Basic EM Fusion

- **Image formation model**

$$z_i(j) = b_i(j)w(j) + e_i(j) \quad i = 1,\ldots,q;\ j \equiv (x, y, m)$$

Sensor image

Sensor selectivity factor (±1,0)

True scene

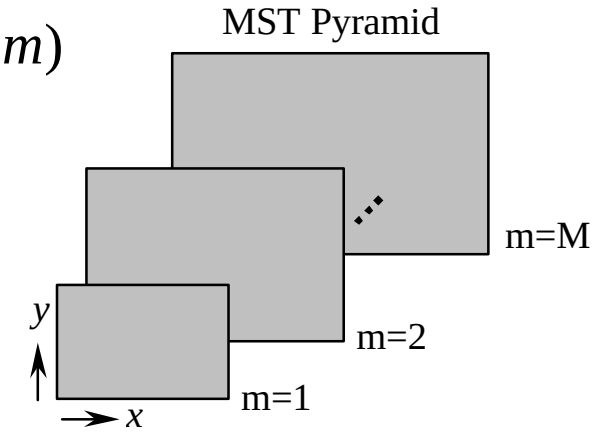

***K*-term Gaussian mixture model with pdf**

$$f_{e_i(j)}(e_i(j)) = \sum_{k=1}^{K} l_{k,i}(j) \frac{1}{\sqrt{2p s^{2}_{k,i}(j)}} \exp\left(-\frac{e_i(j)^2}{2 s^{2}_{k,i}(j)} \right)$$

weight

Gaussian term

Basic EM Fusion (Cont.)

- **Using EM algorithm developing an iterative procedure to estimate the parameters**

$$w(j); b_i(j); l_{1,i}(j),..., l_{K,i}(j); s^2_{1,i}(j),..., s^2_{K,i}(j)$$

- **Using a window of data for efficient estimation:**
  - **Assume** $b_i(l); l_{k,i}(l); s^2_{k,i}(l)$ **constant over the window.**
  - **Number coefficient in window** $l = 1,..., L$
  - **Window contains** $L = h \times h$ **coefficients**

In pyramid level m:

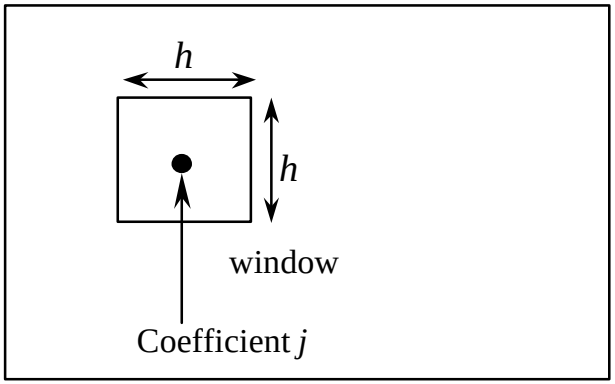

- **Processing looks like neural network but justified by estimation theory**

Improved EM Fusion

- **Improved image formation model**
  - **Build on wavelet transforms to capitalize its statistical properties**
  - **Coefficients in LH, HL, HH bands are organized as forest of quadtrees**
  - **Each coefficient is associated with a state note to capture the parent-children relationship**
  - **The state nodes form a Markov chain (hidden Markov tree (HMT) structure)**
  - **Each Gaussian term in distortion associated with certain state**
- **The EM algorithm is used to develop the HMT-based EM fusion method, an iterative fusion procedure which converges to a maximum likelihood estimate**

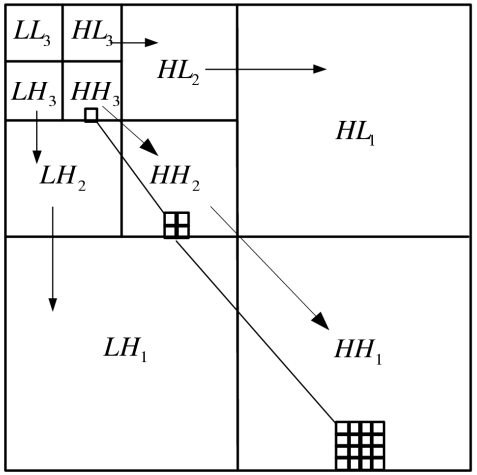

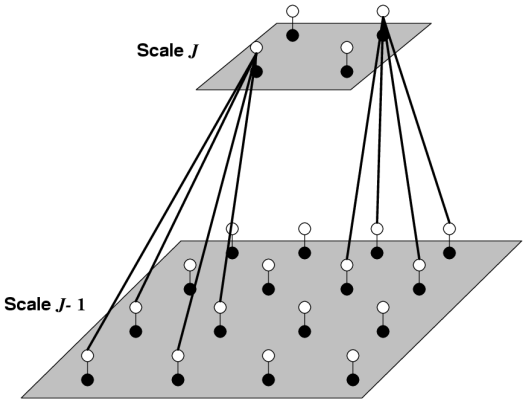

LEHIGH UNIVERSITY

Center for Optical Technologies

Example - Concealed Weapon Detection

Visual Image

MMW Image

HMT-based EM fusion

EM Fusion

Wavelet Fusion

Selecting maximum

LEHIGH UNIVERSITY

Center for Optical Technologies

Example - Night Vision Applications

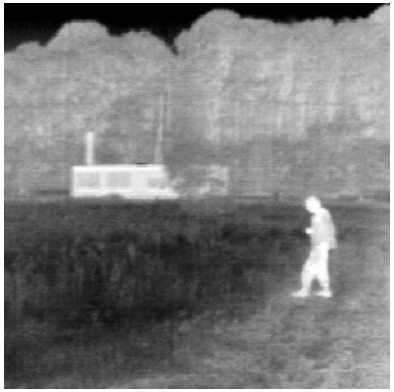

IR Image

Visual Image

HMT-based EM fusion

EM Fusion

Wavelet Fusion

Selecting maximum

Conclusions

- An introduction to image fusion is given
- A toolbox for image registration, fusion and evaluation is presented
- A new color image fusion method for a concealed weapon detection application is proposed
- An adaptive signal processing approach to a general statistical model applied for image fusion is developed

References

- **Book: R. S. Blum and Z. Liu, "Multi-Sensor Image Fusion and Its Applications", to be published by Marcel Dekker in the *special series on Signal Processing and Communications*.**
- **Book chapter: R. S. Blum, Z. Xue, and Z. Zhang, “An Overview of Image Fusion” for the book “'Multi-Sensor Image Fusion and Its Applications”, Marcel Dekker, 2003. Editors: R. S. Blum and Z. Liu.**
- **Book chapter: R. S. Blum and J. Yang, “ Image Fusion using the Expectation-Maximization Algorithm and a Gaussian Mixture Model” for the book "Advanced Video-Based Surveillance Systems", Kluwer, 2003. Editors: G.L.Foresti, C.S.Regazzoni and P.Varnshey.**
- **Book chapter: R. S. Blum and J. Yang, ``A Statistical Signal Processing Approach to Image Fusion using Hidden Markov Models", for the book `` Multi-Sensor Image Fusion and Its Applications", Marcel Dekker, 2003, Editor: R. S. Blum and Z. Liu.**
- **R. S. Blum,, ``Robust Image Fusion using a Statistical Signal Processing Approach", to appear in Information Fusion.**
- **Z. Xue and R. S. Blum, ''Concealed Weapon Detection Using Color Image Fusion,'' invited paper at *the 6th International Conference on Image Fusion*, Queensland, Australia, July 8-11, 2003.**
- **Z. Xue, R. S. Blum and Y. Li, "Fusion of visual and IR images for concealed weapon detection," invited paper at *International Conference on Information Fusion*, Annapolis, Maryland, July 2002**
- **J. Yang, R. S. Blum,`` A Statistical Signal Processing Approach to image fusion for concealed weapon detection", IEEE International Conference on Image Processing, Rochester, NY, Sept. 2002.**
- **J. Yang and R. S. Blum, “Image Fusion Using the Expectation-Maximization Algorithm and a Hidden Markov Model,” submitted to IEEE Vehicular Technology Conference, Los Angeles, CA, Sept. 2004.**
- **Z. Liu, R.S. Blum, Z. Xue, “Multisensor Concealed Weapon Detection by Using A Multiresolution Mosaic Approach,” submitted to IEEE Vehicular Technology Conference, Los Angeles, CA, Sept. 2004.**
- **Report: Image Fusion for Night Vision Applications, distributed to some Army Night Vision Laboratory and ARL engineers and to COT.**