Trends In Embedded Microprocessor Design

Schlett, M.

Computer , Volume: 31 Issue: 8 ,
Aug. 1998
Page(s): 44 -49

Presenter: ccg

CADAL
CSE NSYSU

Motivation

- Designed primarily for the desktop market, the processors have dominated the scene-with the x86 begin the clear winner.

  In concentrating on the desktop , however , we may be missing the next big thing in microprocessor design:

  Embedded CPUs.

Introduction

- Intel is no longer be the most important microprocessor for the desktop PC,

  but its successor may be a personal mobile computer that integrates the portable computer with a cell phone, digital camera …Such devices require low-cost, energy-efficient microprocessors , and Intel is far from a leader in this area.

Introduction (cont.)

- More recently, the market for 32-bit embedded processors has been growing.
- As demand for security and central control stations rises – or as refrigerators begin to include artificial intelligence – this trend becomes more understandable.

Desktop versus embedded

Traditional view to partition the microprocessor

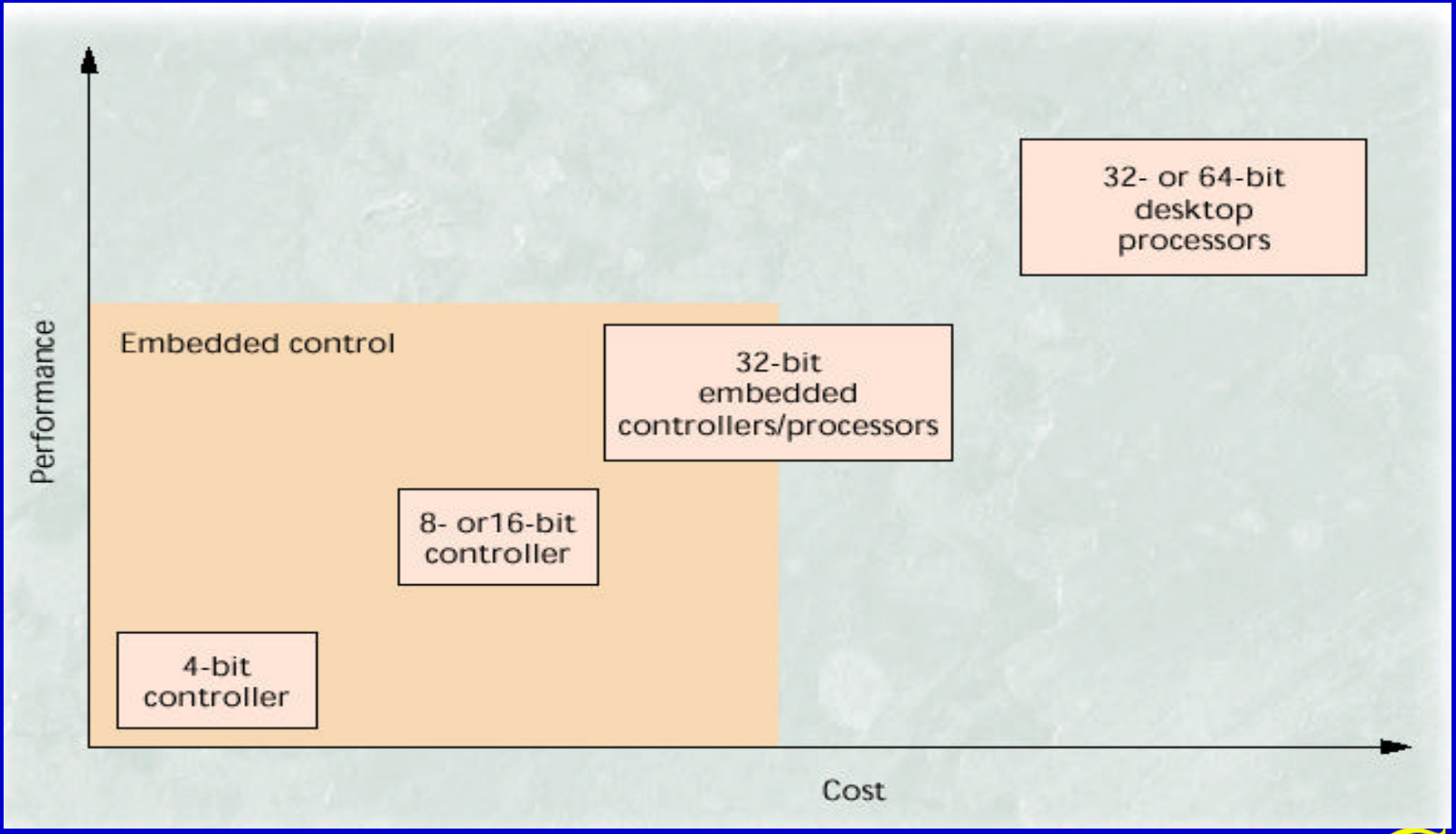

Desktop versus embedded(cont.)

- Recently, such issues as power consumption, cost, and integrated peripherals and include the interrupt response time the amount of on-chip RAM or ROM differentiate a desktop CPU from an embedded processor.
- An embedded microprocessor must do the job for particular application at the lowest possible cost.

New applications drive requirements

- Ex : Video game consoles,
  Handheld PCs, Cellular phones …
- The requirements of these markets force embedded microprocessor designers to reduce manufacturing cost while simultaneously increasing the level of integration and performance.

The evaluation parameters for embedded processors

- Power consumption
- Code density
- Peripheral integration and chipsets
- Multimedia acceleration and acceleration of special application software
- Price/performance ratio

Power consumption

- Most embedded microprocessors have three different modes:

1. Fully operational: All functional units are available to execute instructions.
2. Standby:The processor is not actually executing an instruction.
3. Clock-off:The system has to be restarted.

Reducing power consumption

- Most new processors focus on fully operational and standby modes by stopping transistor activity when a particular block is not in use.
- The simplest way to reduce power consumption is to reduce the voltage level.(This could depend on the process technology.)

Reducing power consumption'd

- Increasingly,the processor core is only a small part of the entire system,so that core voltage means less as a performance metric,because the activities inside a core are normally related to the activities of the peripherals.

Code density

- CISC traditionally have better code density as their more complex inst.
- RISC(Pipeline) have some new strategies.

  EX: Hitachi(16 bit) ; ARM (32 or 16bit);

  Variable instruction length(16,32,48).

Peripherals and higher Integration

- Yield and pin-count are essential measures for the final price and market success.

  Thus, integrated peripherals must simplify system design and shorten the development cycle of complete systems.

Peripherals and Integration (con'd)

- There are two strategies for integrating peripheral logic:

1. To provide the basic core and integrate additional logic for a custom device to create an ASIC.
2. To offer a standard microprocessor together with a companion chip that serves application specific needs.

Peripherals and Integration (con'd)

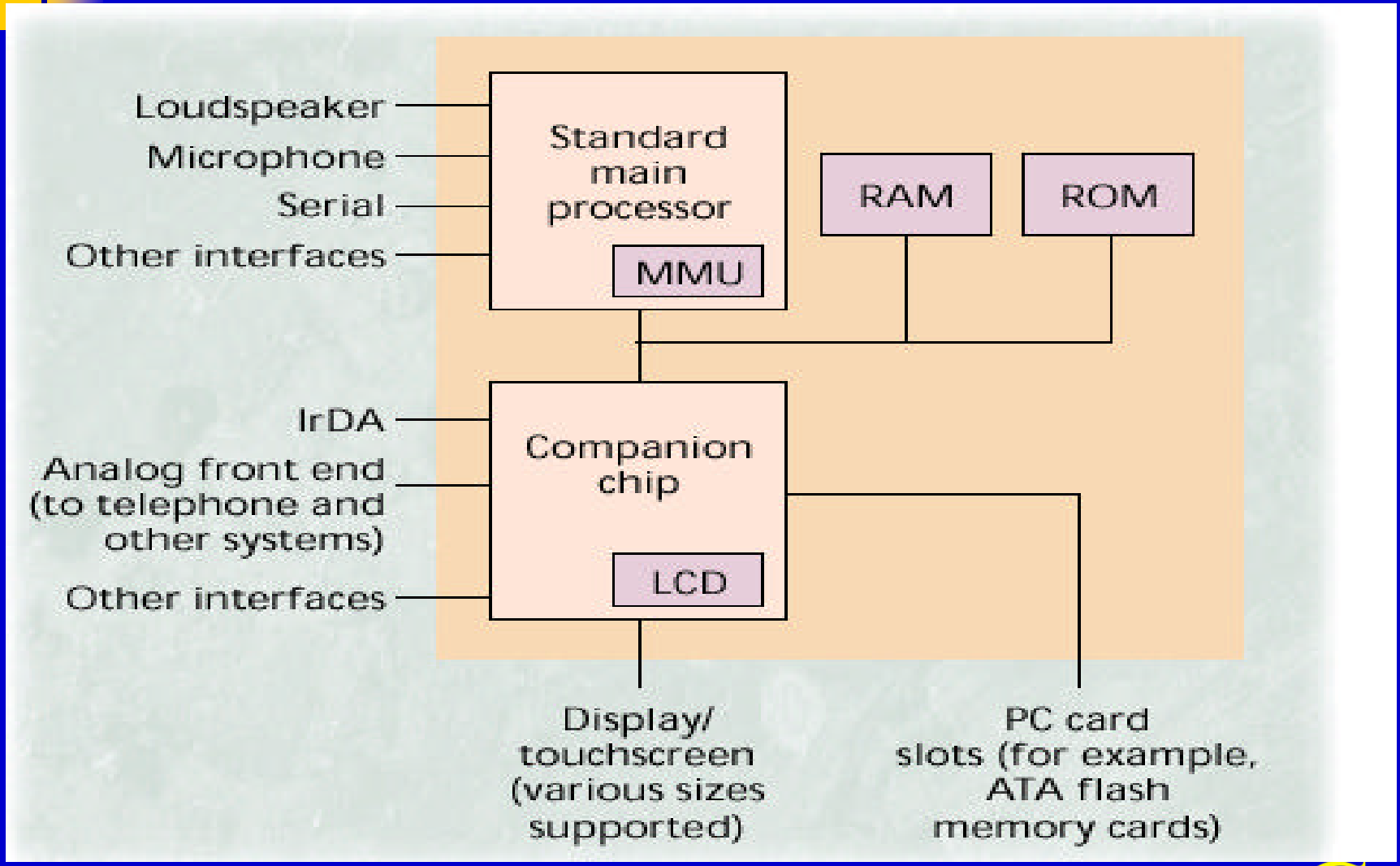

Multimedia acceleration

- Functions that a separate DSP performed in the past – are now more frequently executed by the embedded microprocessor itself.
- Besides general purpose architectures with multimedia extensions, new high-end processors can handle several MPEG streams while running modem code and so forth.

Multimedia acceleration(con't)

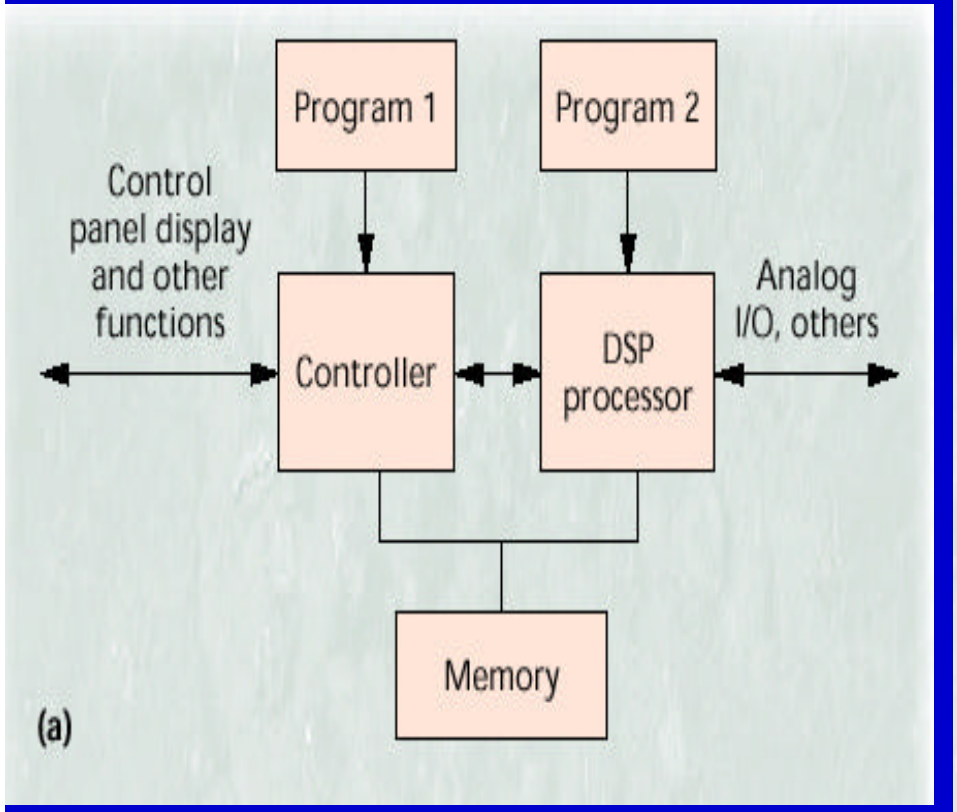

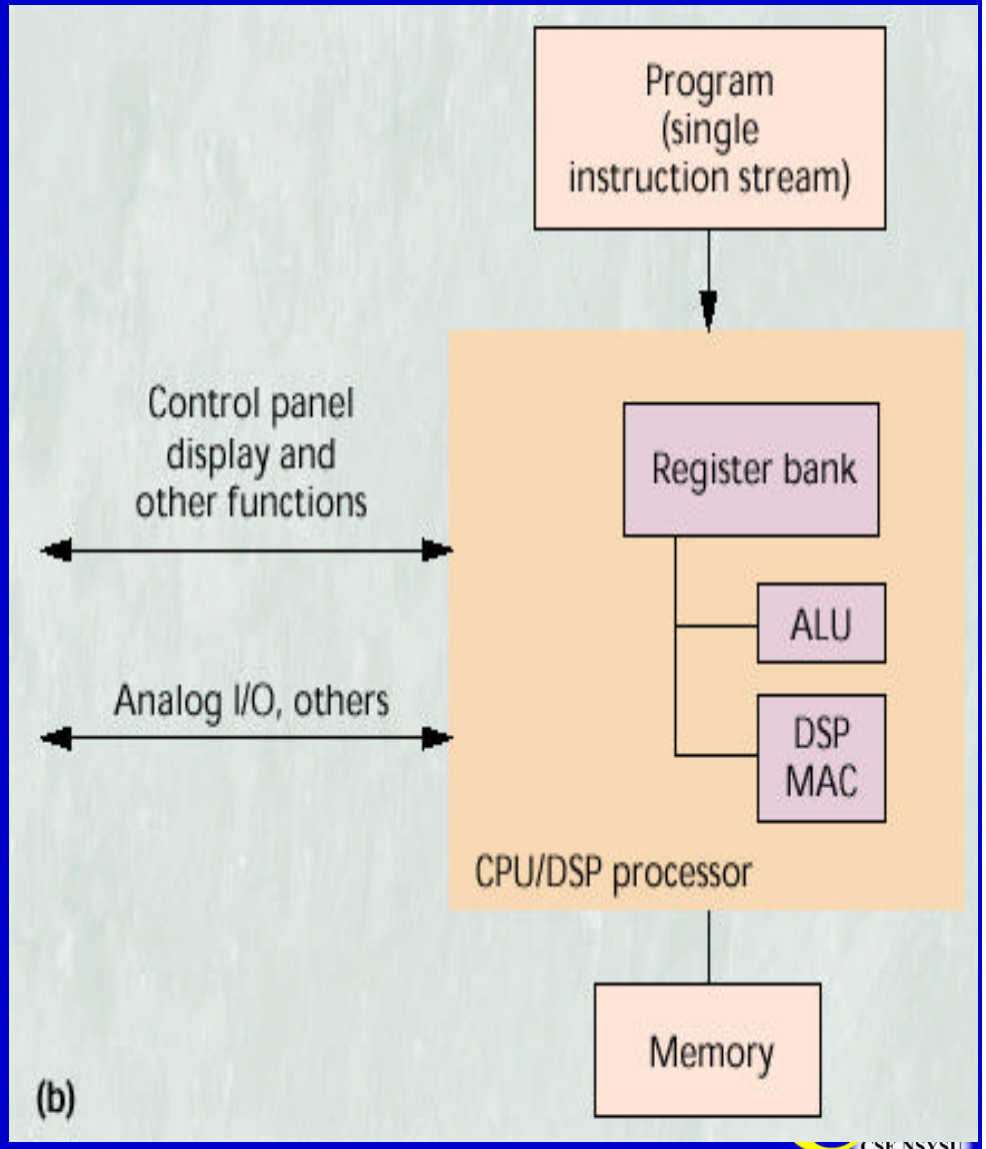

Standardization via OS

- The growing interest has create a demand for a standard OS that could unify the embedded processor market.
- By using standardized platforms, design houses can drastically reduce design cycle time and learning curves - and this is what matters to management.

Conclusions

- The ideal processor of the future will offer plenty of MIPS , run DSP programs like a dedicated DSP processor,integrate all its peripherals, cool the environment like a refrigerator, and cost but a few cents.

Conclusions(con't)

- The embedded world will probably not to have a dominating architecture like x86 in the desktop arena.
- A very realistic possibility is that each market segment will have its dominating architecture – and perhaps vendor.