Rule-Based Engineering Using Declarative Graph Database Queries

Sten Grüner, Ulrich Epple
Chair of Process Control Engineering, RWTH Aachen University

MBEES 2014, Dagstuhl, 05.03.14

Motivation

- Every plant is a highly customized system build up from stock components according to the customer's requirements
- Commissioning and reconfiguration of chemical and manufacturing plants requires a high amount of engineering = creation and testing of control structures from a pre-defined set of components
  - Done manually ➔ high costs
- Consequents: engineering costs become variable for re-configurable plants and hamper the uptake of innovations
- Goal of Industrie 4.0: coupling of production facilities owned by different organizations

Motivation

- A possible solution is the utilization of a rule-based system
- Pros:
  - “Separation of concerns”
  - A rule base is (ideally) independent of the current project
  - Helps to overcome error prone “copy paste” tasks
- Cons:
  - An additional complex system
  - Where does the rule-base come from?
  - Overfitting of the rules
- **Our proposal:** define rules using declarative graph-based queries

Talk Overview

- Applications of rule-based systems in industrial automation
- Technology overview
  - P&I diagram data
  - ACPLT automation server
  - Neo4J and Cypher
- Graph data rule-based system
- Use-cases
  - Code generation out of P&I diagrams
  - Flow path discovery
- Summary and outlook

Rule-based Engineering Systems – An Overview

- The idea of rule-based systems is not new
  - An organizational paradigm of storing engineering knowledge
  - Original ideas come from knowledge-based domain
  - First applications in the automation domain around 1980th

- Part of a broader research field “Automation of Automation”
  - Asset monitoring
  - Assistance systems
  - Human-Machine-Interface

- **Core design decision**: how are the rules represented and evaluated
  - Typically in a permission-conclusion (IF-THEN) format

Rule-based Engineering System – Applications

- Main application area of RBES: model transformations
  - Generate one model based on other model(s)

- Two studied use-cases from the publication by Kraußer at al.:
  1. Generate basic control blocks based on plant description:
     - E.g. create a motor control block in the PLC for each pump on the plant plan
  2. Model exploration:
     - E.g. follow pipes between any two vessels to find a possible flow path that can be monitored

- Further application areas:
  - HMI generation
  - I/O configuration generation
  - Etc.

Talk Overview

- Applications of rule-based systems in industrial automation
- Technology overview
  - P&I diagram data
  - ACPLT automation server
  - Neo4J and Cypher
- Graph data rule-based system
- Use-cases
  - Code generation out of P&I diagrams
  - Flow path discovery
- Summary and outlook

P&I Diagrams

- Piping and instrumentation diagrams – core model for plant structure:

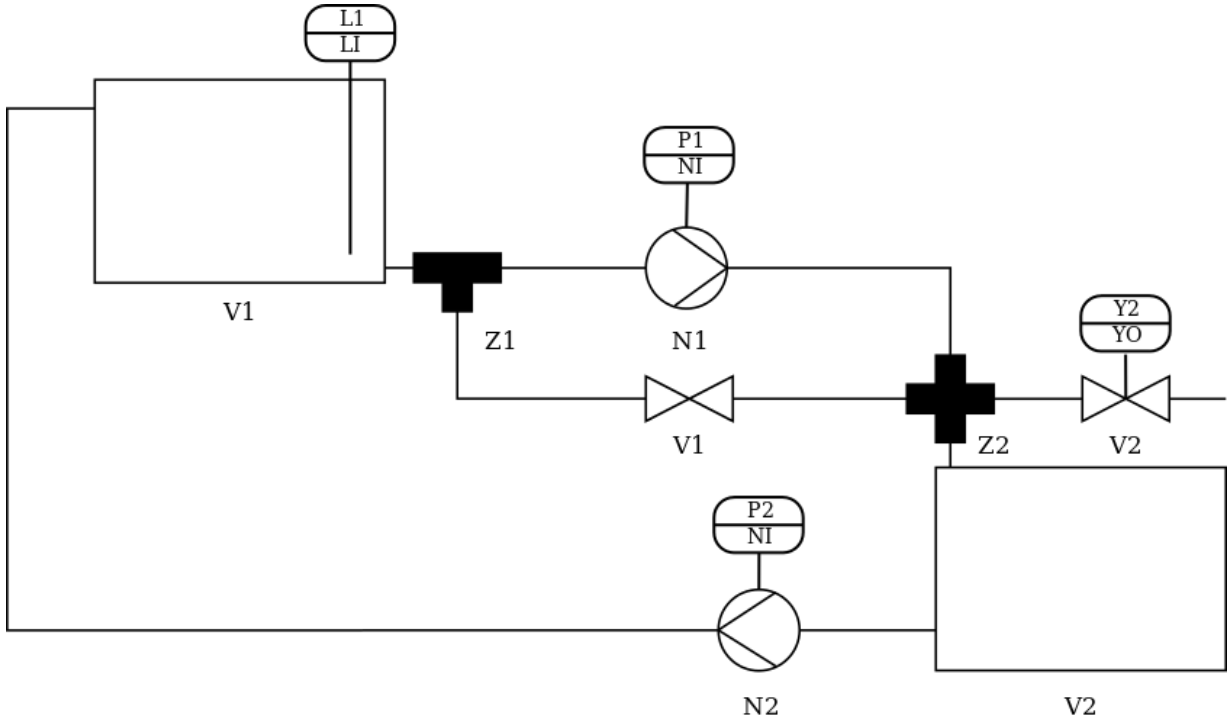

- Plant elements and PCE requests
- Standardized in IEC 62424

PandIX

- Piping and Instrumentation Exchange:
  - CAEX profile for describing P&IDs
  - “XML-Format for P&IDs”

- How to obtain PandIX data?
  - Manual creation
  - Export of CAD/CAE tools e.g. Siemens COMOS or Smartplant

- Core concept:
  - Elements with roles and connection ports
  - Directed connections of different types
  - XML hierarchy is used to model hierarchical element composition

PandIX – Example

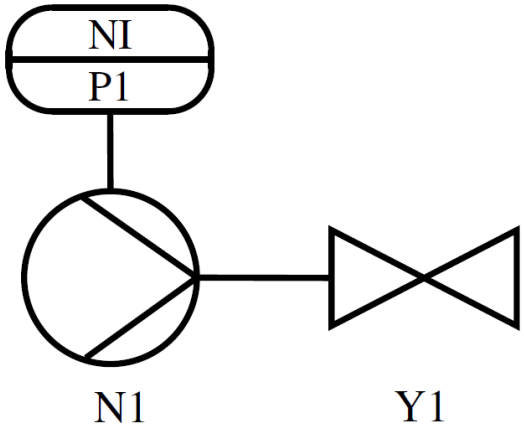


```
[…]
<InternalElement Name="N1">
 <ExternalInterface Name="PIn"
   RefBaseClassPath="ProductConnectionPoint"/>
 <ExternalInterface Name="POut"
   RefBaseClassPath="ProductConnectionPoint"/>
 <ExternalInterface Name="N"
   RefBaseClassPath="ActuationPoint"/>
 <RoleRequirements
   RefBaseRoleClassPath="PumpRequest"/>
</InternalElement>
[…]
<InternalLink Name="N1-Y1"
RefPartnerSideA="N1:POut"
RefPartnerSideB="Y1:PIn"/>
[…]
```

ACPLT Automation Server

- Portable ANSI-C implementation of a runtime environment
- Function blocks as main programming paradigm
  - OO-Features e.g. inheritance and polymorphism
- Message and signal-oriented inter-block communication
- Reconfiguration at runtime
- Binary and HTTP RESTful interfaces (OPC-UA in development)
- Open Source

Function Block Diagram

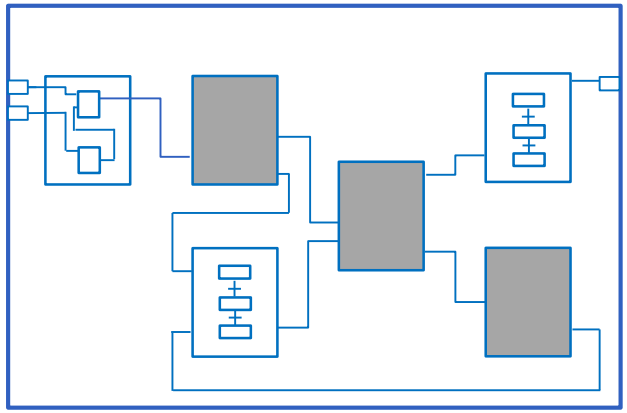

- A graphical programming language from IEC 61131
- Composition of function blocks
- Function block's interface from the outside
- Implementation available in the ACPLT-environment

Neo4J and Cypher for Engineering Purposes

- The presented models (P&IDs and FBDs) have a native graph representation
- Neo4J and Cypher treat nodes and edges as first-class citizens
- Cypher graph patterns are intuitively understandable:
  - No SQL knowledge required
  - A leap from ASCII representation to graphical query representation is possible
  - Can work as a bridge between computer scientists and automation engineers

Neo4J

- Open-Source noSQL Graph-Based-Database
  - can be faster than typical SQL engines
  - Impements a graph query language **Cypher**

- Data Model: attributed multi-graph
  - Nodes, Pointed relations of different types
  - Both have a key-value attribute table

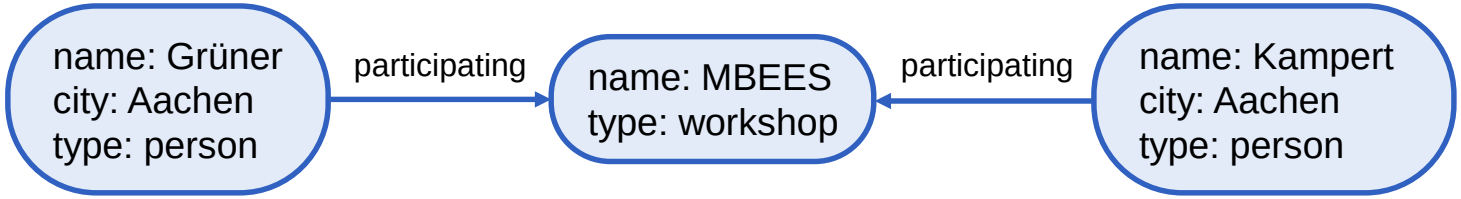

Cypher

- Cypher
  - SQL-similar language for declarative graph queries

- Example for a read-only query:
  -
```
START n=node(*)
MATCH n-[:participating]->()<-[:participating]-m
RETURN n.name, m.name;
```

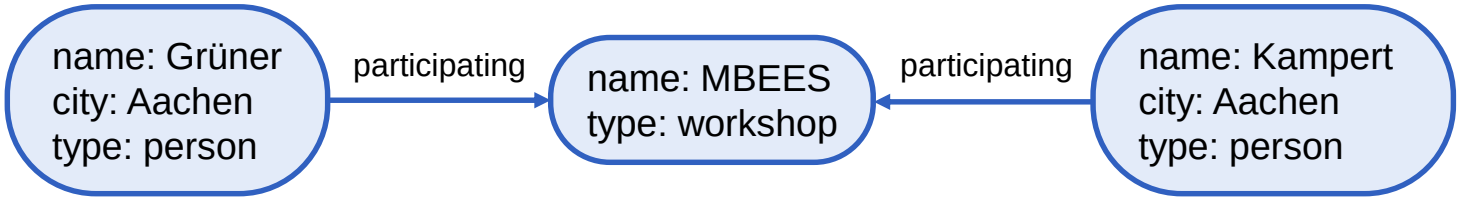

  - Returns a table:

n.name	m.name
Grüner	Kampert
Kampert	Grüner

Talk Overview

- Applications of rule-based systems in industrial automation
- Technology overview
  - P&I diagram data
  - ACPLT automation server
  - Neo4J and Cypher
- Graph data rule-based system
- Use-cases
  - Code generation out of P&I diagrams
  - Flow path discovery
- Conclusion and outlook

Architecture of Graph Data Rule-Based System

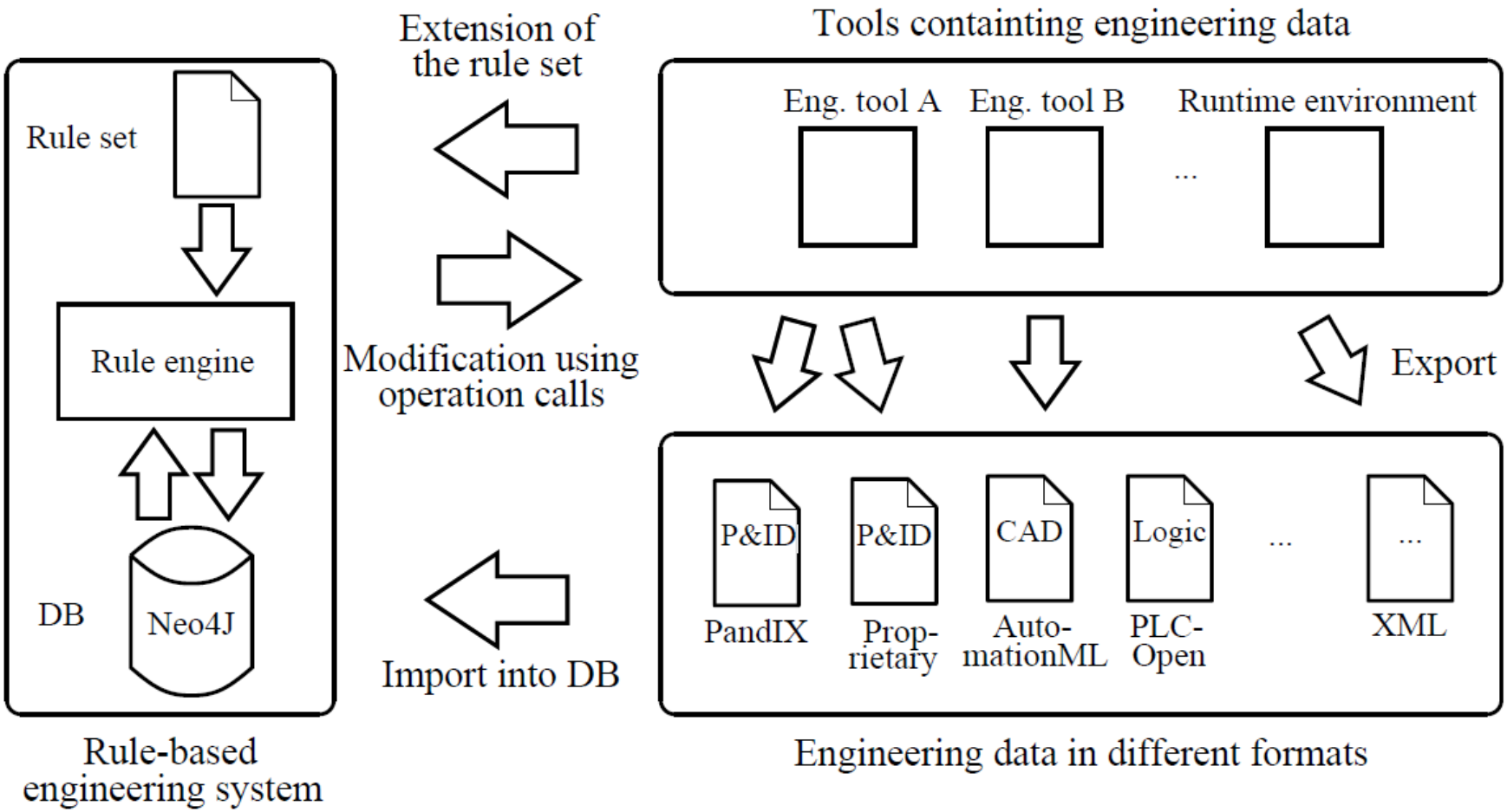

Rule Representation and Evaluation

- IF-THEN logic replaced by FORALL-DO logic in RuleML-like syntax :

```
<rule>
  <forall>
    <query><![CDATA[
       START n=node(*) MATCH n-[:participating]->()<-
       [:participating]-m RETURN n.name, m.name
    ]]></query>
  </forall>
  <op>System.out.println("{n.name} and {m.name}
       participate at the same event")</op>
</rule>
```

Parsing the result table

- Operations are evaluated on the rows of the table
- Tokens matching column names are replaced in the operation calls
- Java reflection used to keep the system easily extendable

Implemented Operations

- Text based I/O
  - Console output
  - Writing into files
- KS / HTTP protocol wrapper to communicate to ACPLT servers
  - Creating function blocks / connection
  - Reading variables
- Neo4J API
  - Creating properties for nodes
  - Creating links between nodes

Talk Overview

- Applications of rule-based systems in industrial automation
- Technology overview
  - P&I diagram data
  - ACPLT automation server
  - Neo4J and Cypher
- Graph data rule-based system
- Use-cases
  - Code generation out of P&I diagrams
  - Flow path discovery
- Summary and outlook

Use-Case Architecture

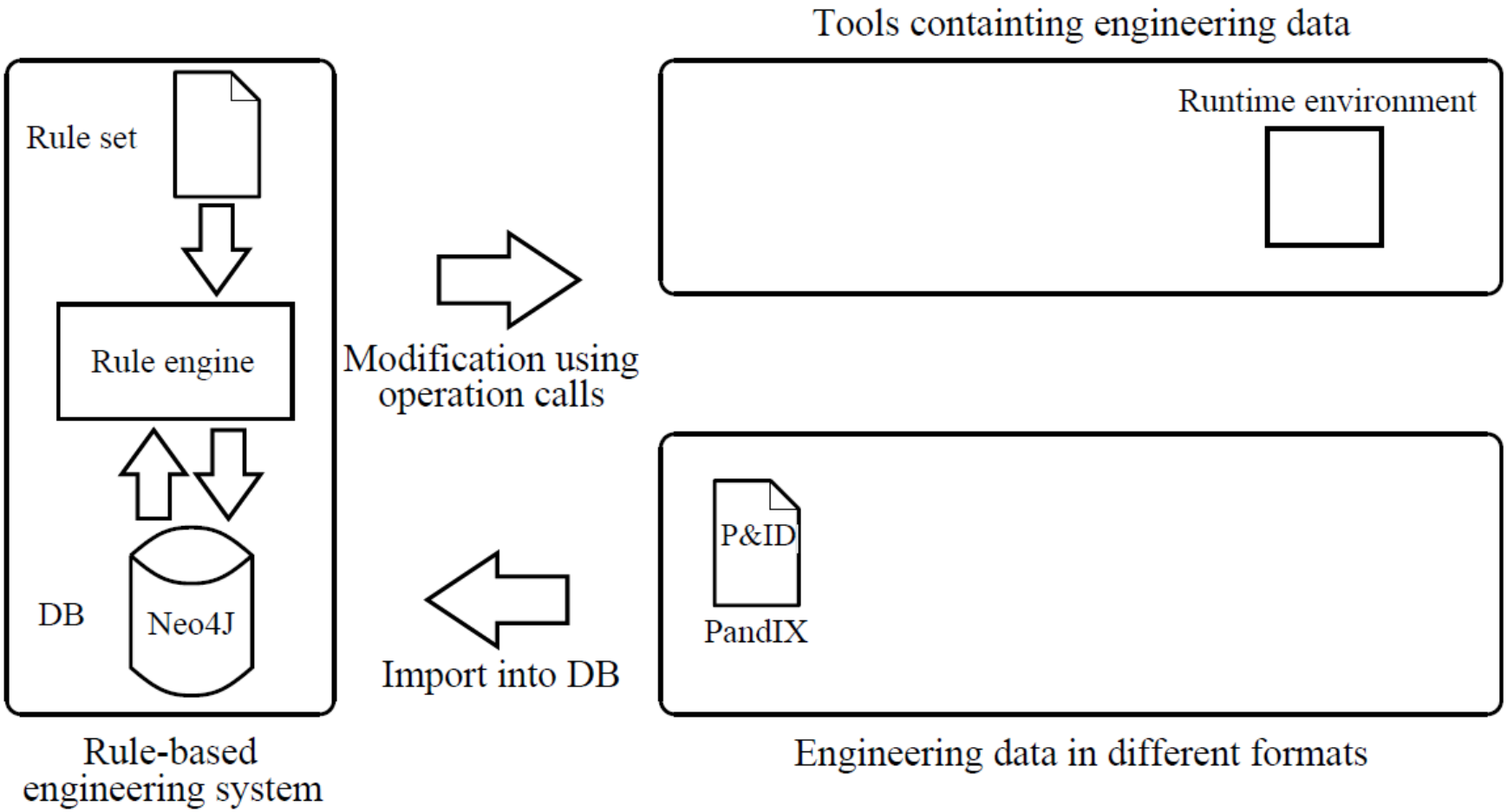

Use-Case 1:

- Generation of pre-defined single control block instances:

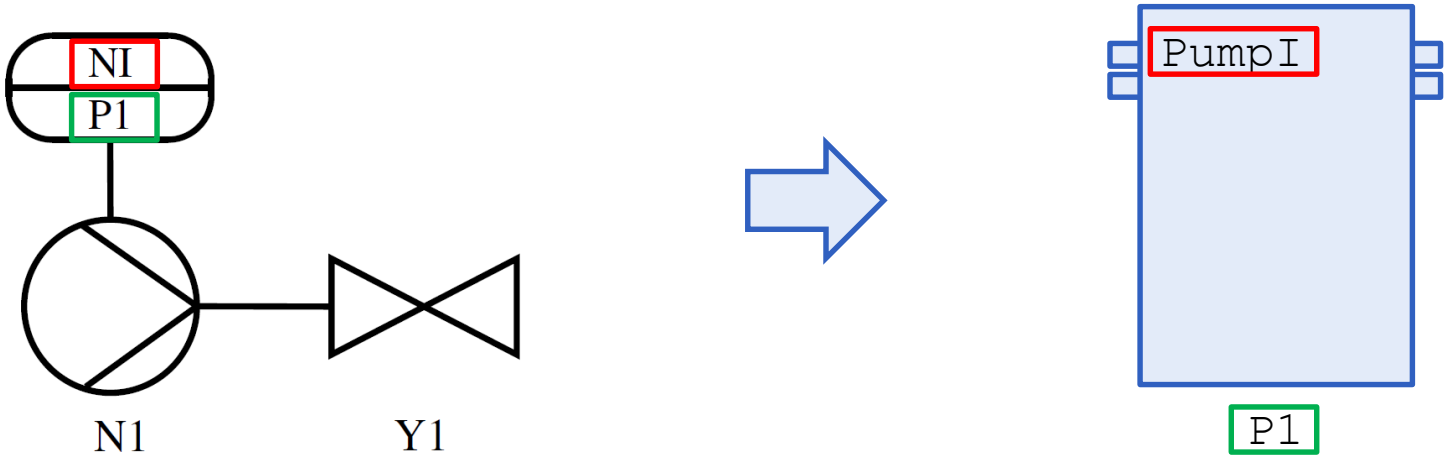

Use-Case 1: Imported Graph Data

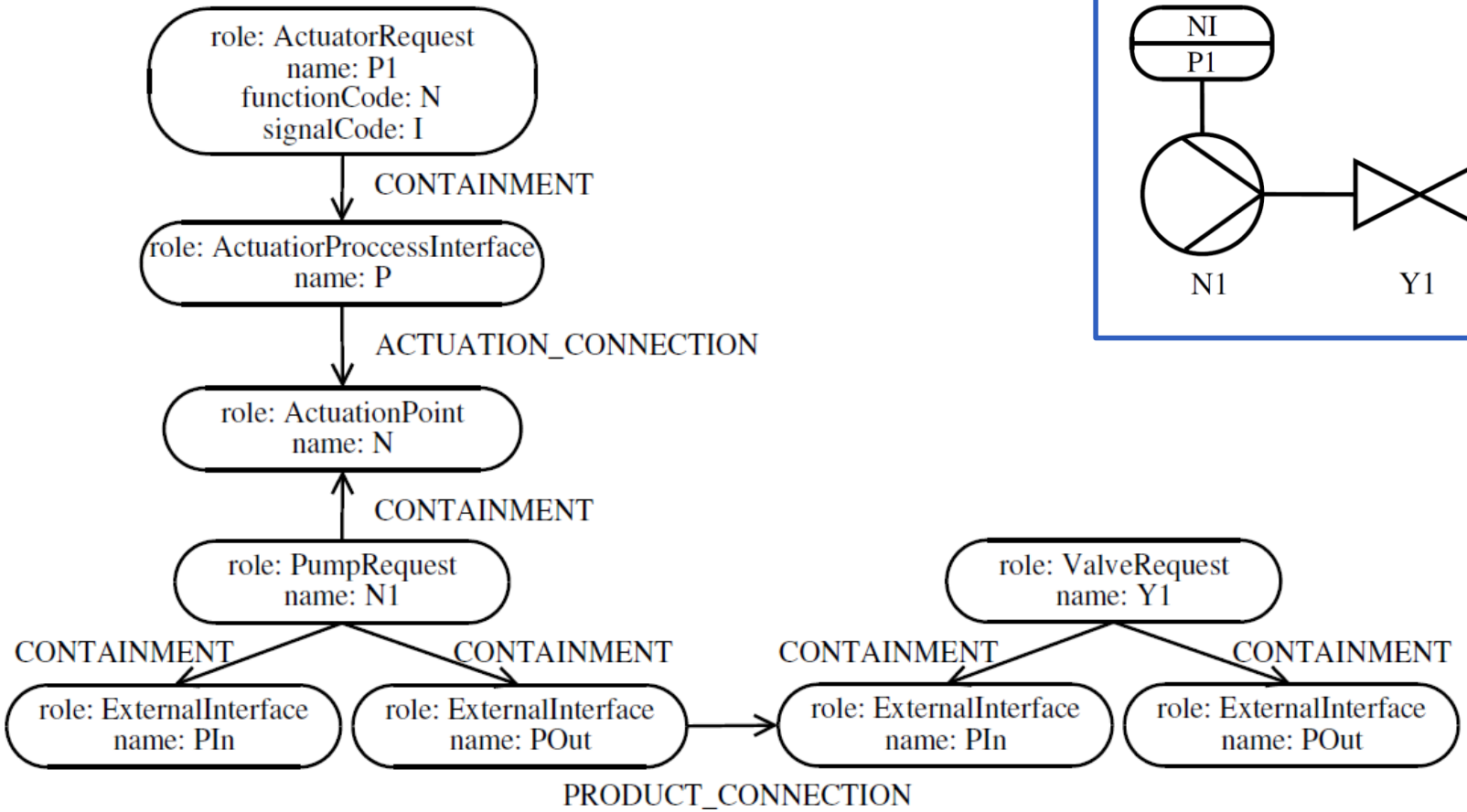

Use-Case 1: Rule

```
<rule>
  <forall>
    <query><![CDATA[
      START n=node(*)
      MATCH pump-[:CONTAINMENT]->()
        -[:ACTUATION_CONNECTION]->()<-[:CONTAINMENT]-pce
      WHERE pump.role = "PumpRequest"
        AND pce.role = "ActuatorRequest"
        AND pce.functionCode = "N"
      RETURN distinct id(pump), pump.Name, pce.Name,
        pce.SignalCode
     ]]></query>
     <op>fn.KS.createObject("Pump{pce.SignalCode
        "/TechUnits", "{pce.Name}")</op>
     <op>fn.Neo4j.createPropForNodeid(
        "id(pump)", "basicControl",
        "/TechUnits/{pce.Name}")</op>
  </forall>
</rule>
```

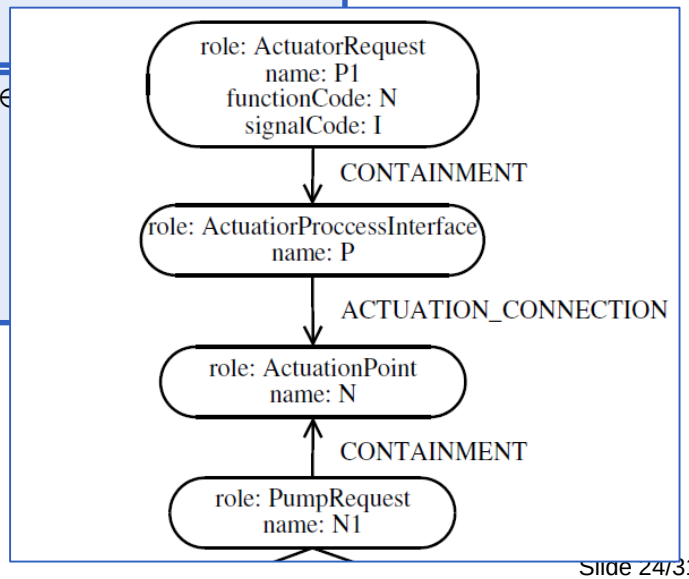

Use-Case 2:

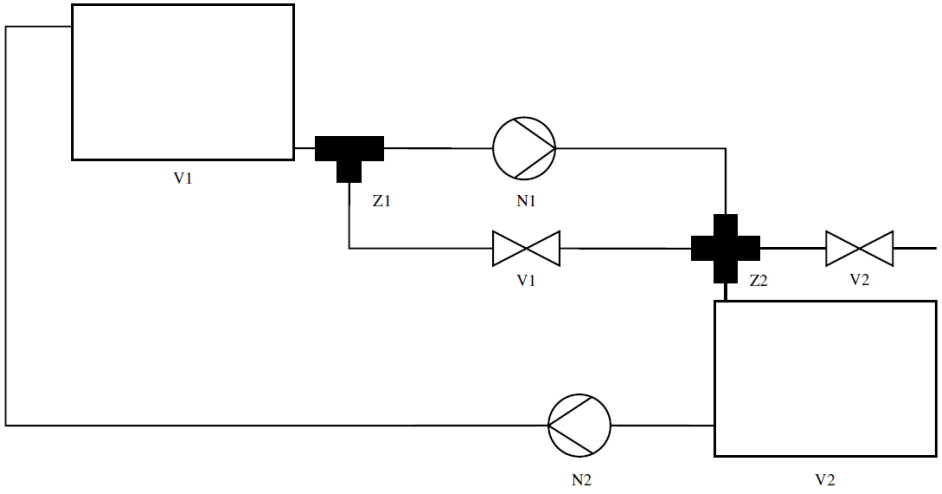

P&I Data

Possible flow paths between any pair of vessels

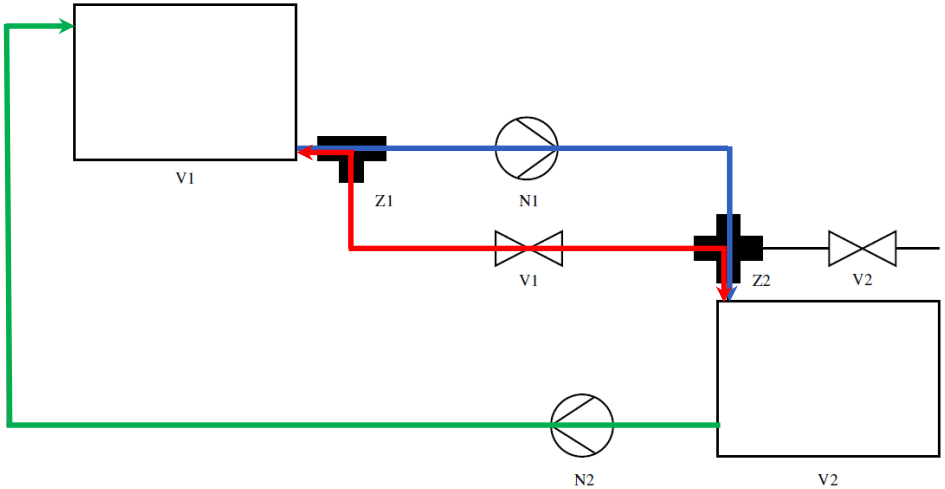

Use-Case 2: Flow Types

- Internal and external flows occur only between **product ports**:
  - External flows = flow in pipes – both directions
  - Internal flows = flow inside of an element – type dependent

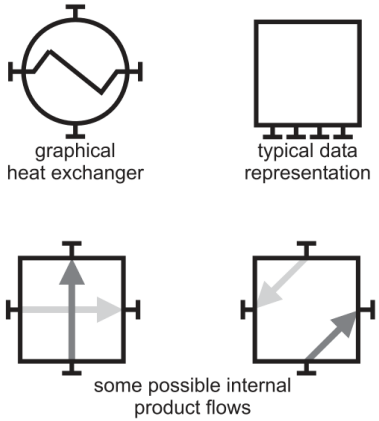

- Assumptions:
  - Pumps allow flows in one directions
  - Fittings and valves allow flows in any direction

Use-Case 2: Rule Query

```
START n=node:node_auto_index(Name="plant")
MATCH v1-[:CONTAINMENT]->p1,
  p2<-[:CONTAINMENT]-v2,
  path=p1-[:INTERNAL_FLOW|EXTERNAL_FLOW*..16]->p2
WHERE v1.role = "VesselRequest"
  AND v2.role = "VesselRequest"
  AND ALL(n IN nodes(path) WHERE
          length(filter(m IN nodes(path)
                   WHERE m.parent=n.parent)
                 )<=2
          )
RETURN DISTINCT extract(x in nodes(path) |
                        [x.parent, x.Name])
```

Use-Case 2: Evaluation Result

```
[["V1","POutBottom"],["Z1","P1"],["Z1","P3"],
["Y1","PIn"],["Y1","POut"],["Z2","P3"],
["Z2","P2"],["V2","POutTop"]]

[["V1","POutBottom"],["Z1","P1"],["Z1","P3"],
["N1","PIn"],["N1","POut"],["Z2","P1"],
["Z2","P2"],["V2","POutTop"]]

[["V2","POutTop"],["Z2","P2"],["Z2","P3"],
["Y1","POut"],["Y1","PIn"],["Z1","P3"],
["Z1","P1"],["V1","POutBottom"]]

[["V2","POutBottom"],["N2","PIn"],
["N2","POut"],["V1","POutTop"]]
```

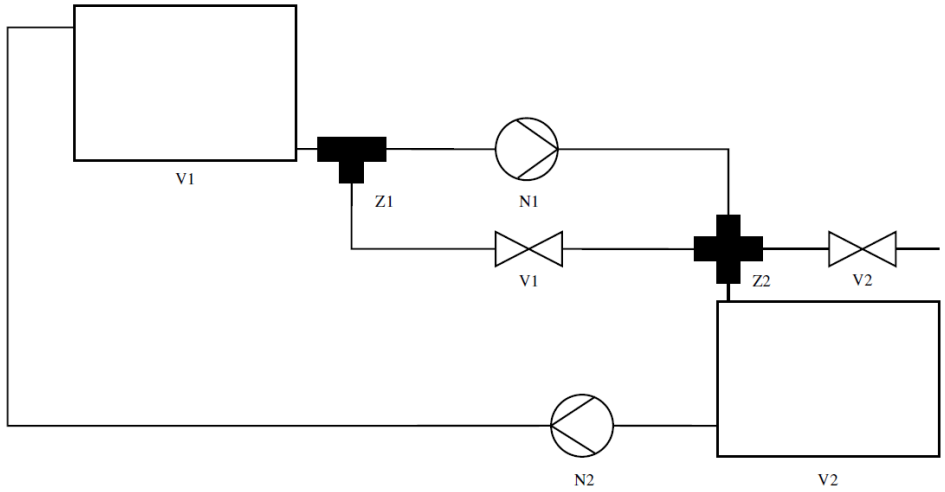

Use-Case 2: Drawbacks

- Problem 1: The query is not intuitively understandable

- Problem 2: Performance problems
  - The execution of the query takes about 23 minutes [sic]
  - The problem is the query evaluation mechanism:
    - All the paths up to length 16 are accumulated at first
    - Match filter is applied on the accumulated path set
    - Number of paths grows exponentially
    - ➔ Execution time grows exponentially

- Lessons learned:
  - Cypher syntax/evaluation needs to be improved to formulate path properties and filter them on the fly
  - **Strength of graph based rules:** local, pattern-matching applications

Talk Overview

- Applications of rule-based systems in industrial automation
- Technology overview
  - P&I diagram data
  - ACPLT automation server
  - Neo4J and Cypher
- Graph data rule-based system
- Use-cases
  - Code generation out of P&I diagrams
  - Flow path discovery
- Summary and outlook

Summary and Outlook

- We presented a graph query rule-based engineering system
- The system relies on a graph database and graph queries
  - Rule description formalism is accessible to both engineers and computer scientists
- The application of the system is neither limited to industrial automation engineering nor to ACPLT technologies
- Further work: extension and verification of the system to new application areas
  - Further import plugins
  - Further operation implementations

Rule Set

- Due to the simplicity of the engine the know-how is stored in the rule set

- Options of rule-set creation:
  - Manual design for a particular task
    +: good results, simple
    –: expensive

  - Automatic generation from existing data using machine learning
    +: less overhead
    –: expert insight still needed

  - Assistance system
    +: flexible, on the fly creation and testing

Function Blocks

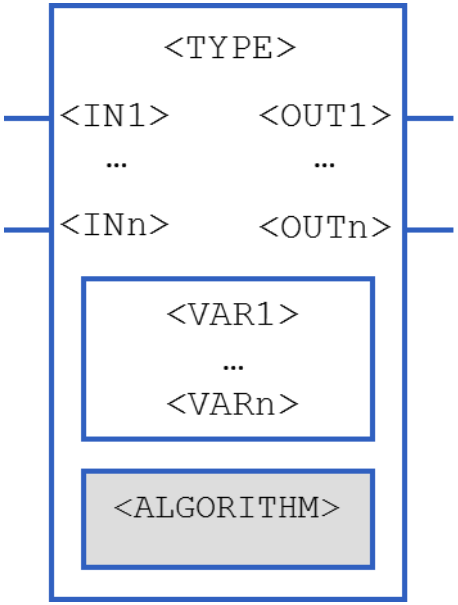

- Function block is the smallest program organization unit
- Known concept from IEC 61131-3, IEC 61499 and MATLAB/Simulink
- Data encapsulation through clear interfaces
- Native Blocks: algorithm implemented in a higher language (C, ST, etc.) (black-box)
- Aggregated Blocks: internal logic composed from further function blocks (white-box)