The truck scheduling problem at crossdocking terminals: exclusive versus mixed mode

L. Berghman, C. Briand, R. Leus and P. Lopez

ICORES; February 2015

Outline

- What is cross-docking?
- Exclusive versus mixed mode
- Problem statement and notations
- Time-indexed formulation
- Minimizing number of double purpose gates
- Computational results
- Conclusions and future research

What is cross-docking?

- Warehouse management concept
- Items delivered by inbound trucks are immediately sorted out, reorganized, and loaded into outbound trucks
- Advantages:
  - faster deliveries
  - lower inventory costs
  - reduction of warehouse space requirement
- Storage and length of stay of a product in the warehouse are limited
- $\Rightarrow$ Appropriate coordination of inbound and outbound trucks

The truck scheduling problem

- Succession of truck processing at dock doors
- Minimize storage usage during product transfer
- Internal organization of the warehouse: not explicitly taken into consideration
- We do not model the resources that may be needed to load or unload the trucks

Exclusive mode

Each dock is exclusively dedicated either to inbound or to outbound operations

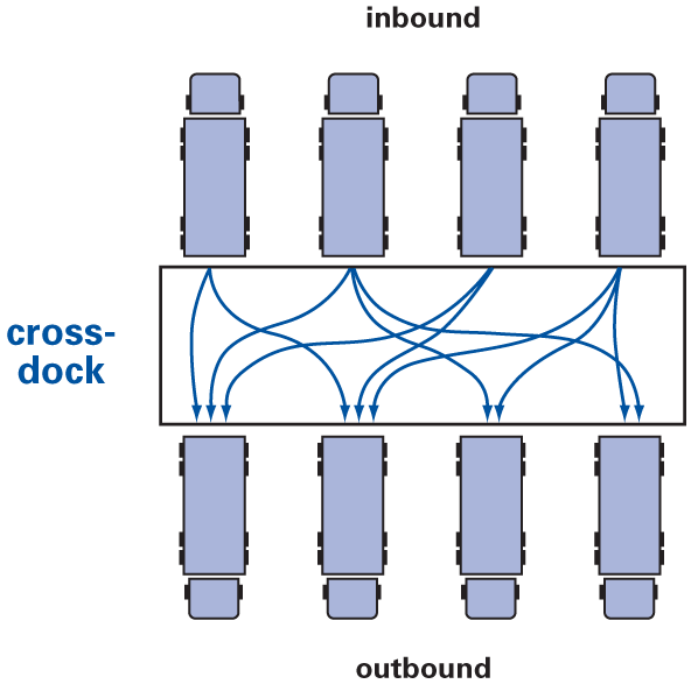

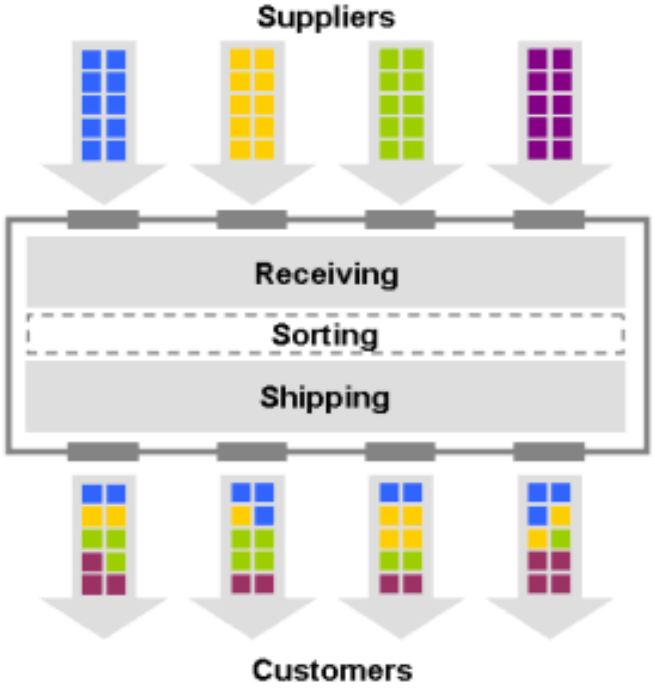

http://people.hofstra.edu/geotrans/eng/ch5en/conc5en/crossdocking.html
http://www.lean.org/Common/LexiconTerm.aspx?termid=195

Mixed mode

An intermixed sequence of inbound and outbound trucks to be processed per dock is allowed

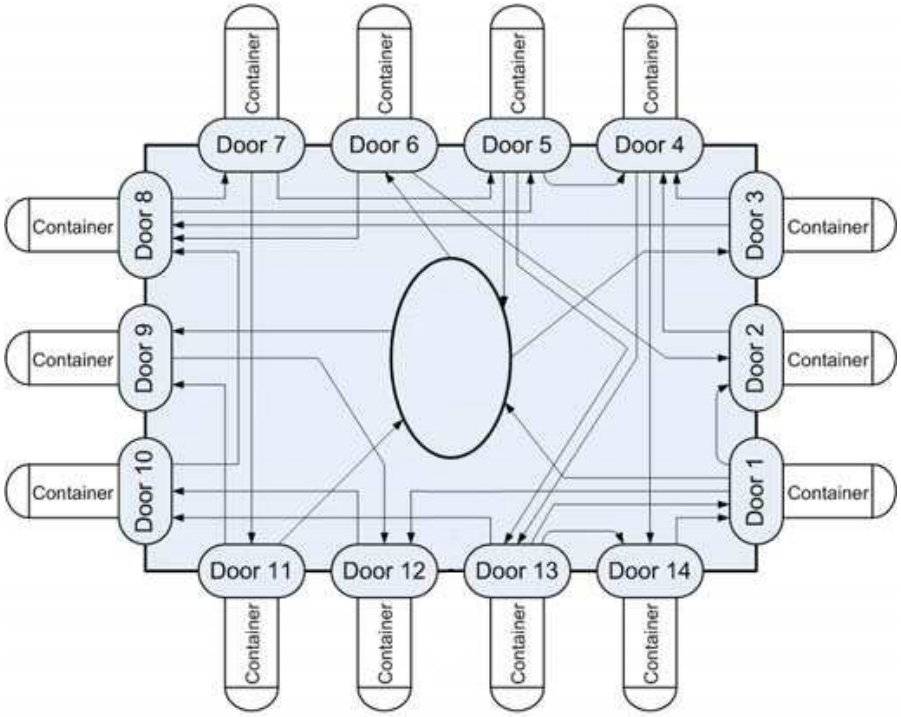

Shakeri M., Low M.Y.H. and Li Z. 2008. A generic model for crossdock truck scheduling and truck-to-door assignment problems. *Proc. of the 6th IEEE int. conf. on industrial informatics*. pp 857-864.

Problem statement and notations

- A set of incoming trucks $i \in I$ need to be unloaded
- A set of outgoing trucks $o \in O$ need to be loaded
- The processing time of truck $j \in I \cup O$ equals p_j
- Every truck has its release time r_j (planned arrival time) and its deadline $\tilde{d}_j$ (latest allowed departure time)
- Precedence relations $(i, o) \in P \subset I \times O$: w_{io} the number of pallets transshipped from i to o
- s_j is the starting time of the handling of truck j
- There are n docks that can be used in mixed mode

Conceptual problem statement

$$\min \sum_{(i,o)\in P} w_{io}(s_o - s_i)$$

subject to

$$\begin{aligned} s_j &\geq r_j && \forall j \in I \cup O \\ s_j + p_j &\leq \tilde{d}_j && \forall j \in I \cup O \\ s_o - s_i &\geq 0 && \forall (i,o) \in P \\ |A_t| &\leq n && \forall t \in T \end{aligned}$$

$A_t = \{j \in I \cup O | s_j \leq t < s_j + p_j\}$ the set containing all tasks being executed at time t

T the set containing all time instants considered

Time-indexed (linear) formulation

For all inbound trucks $i \in I$ and all time periods $\tau \in \mathcal{T}_i$,

$$x_{i\tau} = \begin{cases} 1 & \text{if the unloading of inbound truck } i \text{ is started} \\ & \text{during time period } \tau, \\ 0 & \text{otherwise,} \end{cases}$$

with $\mathcal{T}_i = [r_i + 1, \tilde{d}_i - p_i + 1]$, the relevant time window for inbound truck i.
For all outbound trucks $o \in O$ and all time periods $t \in \mathcal{T}_o$,

$$y_{o\tau} = \begin{cases} 1 & \text{if the loading of outbound truck } o \text{ is started} \\ & \text{during time period } \tau, \\ 0 & \text{otherwise,} \end{cases}$$

with $\mathcal{T}_o = [r_o + 1, \tilde{d}_o - p_o + 1]$.

Time-indexed formulation

$$\min \sum_{(i,o)\in P} \sum_{\tau\in\mathcal{T}} w_{io}\tau\left(y_{o\tau} - x_{i\tau}\right)$$

subject to

$$\sum_{\tau\in\mathcal{T}_i} x_{i\tau} = 1 \qquad \forall i \in I \qquad (1)$$

$$\sum_{\tau\in\mathcal{T}_o} y_{o\tau} = 1 \qquad \forall o \in O \qquad (2)$$

$$\sum_{\tau\in\mathcal{T}} \tau\left(x_{i\tau} - y_{o\tau}\right) \leq 0 \qquad \forall (i,o) \in P \qquad (3)$$

$$\sum_{i\in I} \sum_{u=\tau-p_i+1}^{\tau} x_{iu} + \sum_{o\in O} \sum_{u=\tau-p_o+1}^{\tau} y_{ou} \leq n \qquad \forall \tau \in \mathcal{T} \qquad (4)$$

$$x_{i\tau}, y_{o\tau} \in \{0,1\}$$

Two different precedence constraints

$$\sum_{\tau \in \mathcal{T}} \tau \left(x_{i\tau} - y_{o\tau} \right) \leq 0 \qquad \forall (i,o) \in P$$

$$\sum_{u=1}^{\tau} x_{iu} - \sum_{u=1}^{\tau} y_{ou} \leq 0 \qquad \forall (i,o) \in P; \forall \tau \in \mathcal{T}$$

- Aggregated versus disaggregated constraint
- Disaggregated is theoretically stronger
- The additional CPU time needed to solve the larger linear program does not always counterbalance the significant improvement of the bound

Generation of instances

- $n \in \{10, 20, 30\}$
- $|I| \in \{3n, 4n, 5n\}$
- $|O| = \alpha \times |I|$ with $\alpha = \{0.8, 1, 1.2\}$
- $p_j \in [\beta, 30]$ with $\beta = \{10, 20, 30\}$
- $r_i \in [1, \frac{\delta \sum p_j}{n}]$ with $\delta = \{0.3, 0.6, 0.9\}$
- $\tilde{d}_o \in [1.5 \times \underline{d}_o, 5 \times \underline{d}_o]$ with $\underline{d}_o = \max_{(i,o)\in P}\{r_i + p_o\}$
- $r_o \in [\max_{(i,o)\in P}\{r_i\}, \tilde{d}_o - p_o]$
- $\tilde{d}_i \in [1.5(r_i + p_i), \min\{\min_{(i,o)\in P}\{\tilde{d}_o - p_o\} + p_i, \max_{(i,o)\in P}\{\tilde{d}_o\}\}]$
- $w_{io} \in [\frac{0.8 p_i}{\gamma}, \frac{1.2 p_i}{\gamma}]$ with $\gamma \in [1, \frac{p_i}{3}]$
- $|T| = \max_{o\in O}\{\tilde{d}_o\}$

Computational results

Solving with Cplex ($T_{cpu} \leq 5$ minutes), using aggregated constraints

		exclusive mode			mixed mode		
n	$\|I\|$	infeasible	feasible	optimal	infeasible	feasible	optimal
10	30	23.81%	65.08%	11.11%	0.00%	84.13%	15.87%
10	40	23.81%	74.60%	1.59%	0.00%	96.83%	3.17%
10	50	26.98%	63.49%	0.00%	0.00%	98.41%	0.00%
20	60	12.70%	82.54%	3.17%	0.00%	96.83%	3.17%
20	80	22.22%	73.02%	0.00%	0.00%	98.41%	0.00%
20	100	23.81%	61.90%	0.00%	0.00%	90.48%	0.00%
30	90	15.87%	77.78%	0.00%	0.00%	95.24%	4.76%
30	120	19.05%	65.08%	0.00%	0.00%	95.24%	0.00%
30	150	28.57%	53.97%	0.00%	0.00%	79.69%	0.00%
total		21.87%	68.61%	1.76%	0.00%	92.95%	3.00%

- average GAP with respect to LP solution is 13,28%
- average GAP with respect to a Lagrangian relaxation is 6,73%
- exclusive versus mixed mode: improvement of 8%

Minimizing number of double purpose gates

- switching completely to mixed mode might impact significantly the company organization
- it might not be needed that every gate has a double purpose
- determining the gain obtained when switching only a small number of docks

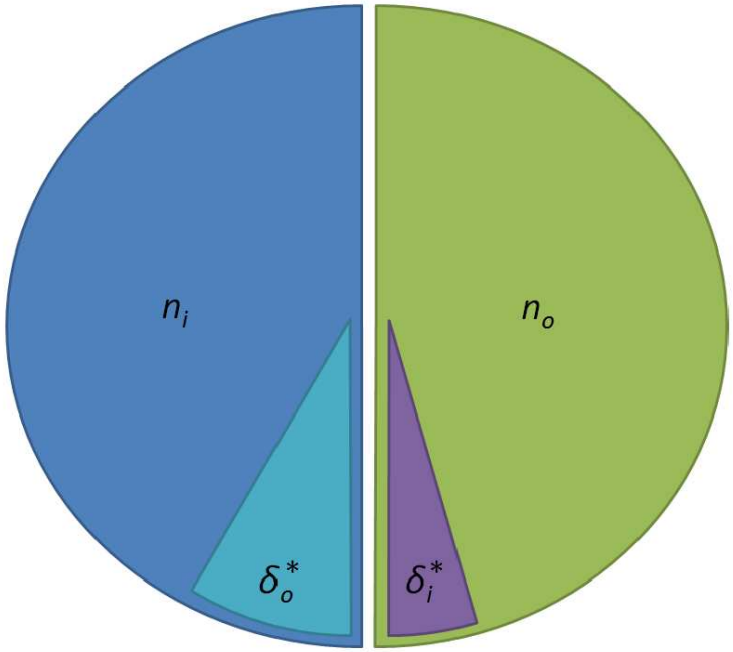

Second time-indexed formulation

- δ_i^* (δ_o^*) is the optimal value of δ_i (δ_o), the number of gates that we allow to unload (load) incoming (outgoing) trailers, on top of n_i (n_o)
- we solve the presented time-indexed formulation $\Rightarrow z^*$
- minimize $\delta = \delta_i + \delta_o$ and add the following constraints:

$$\sum_{(i,o)\in P} \sum_{\tau\in\mathcal{T}} w_{io}\tau\left(y_{o\tau} - x_{i\tau}\right) \leq z^* \tag{5}$$

$$\sum_{i\in I} \sum_{u=\tau-p_i+1}^{\tau} x_{iu} \leq n_i + \delta_i \qquad \forall \tau \in \mathcal{T} \tag{6}$$

$$\sum_{o\in O} \sum_{u=\tau-p_o+1}^{\tau} y_{ou} \leq n_o + \delta_o \qquad \forall \tau \in \mathcal{T} \tag{7}$$

$$n_i + n_o = n \tag{8}$$

Computational results

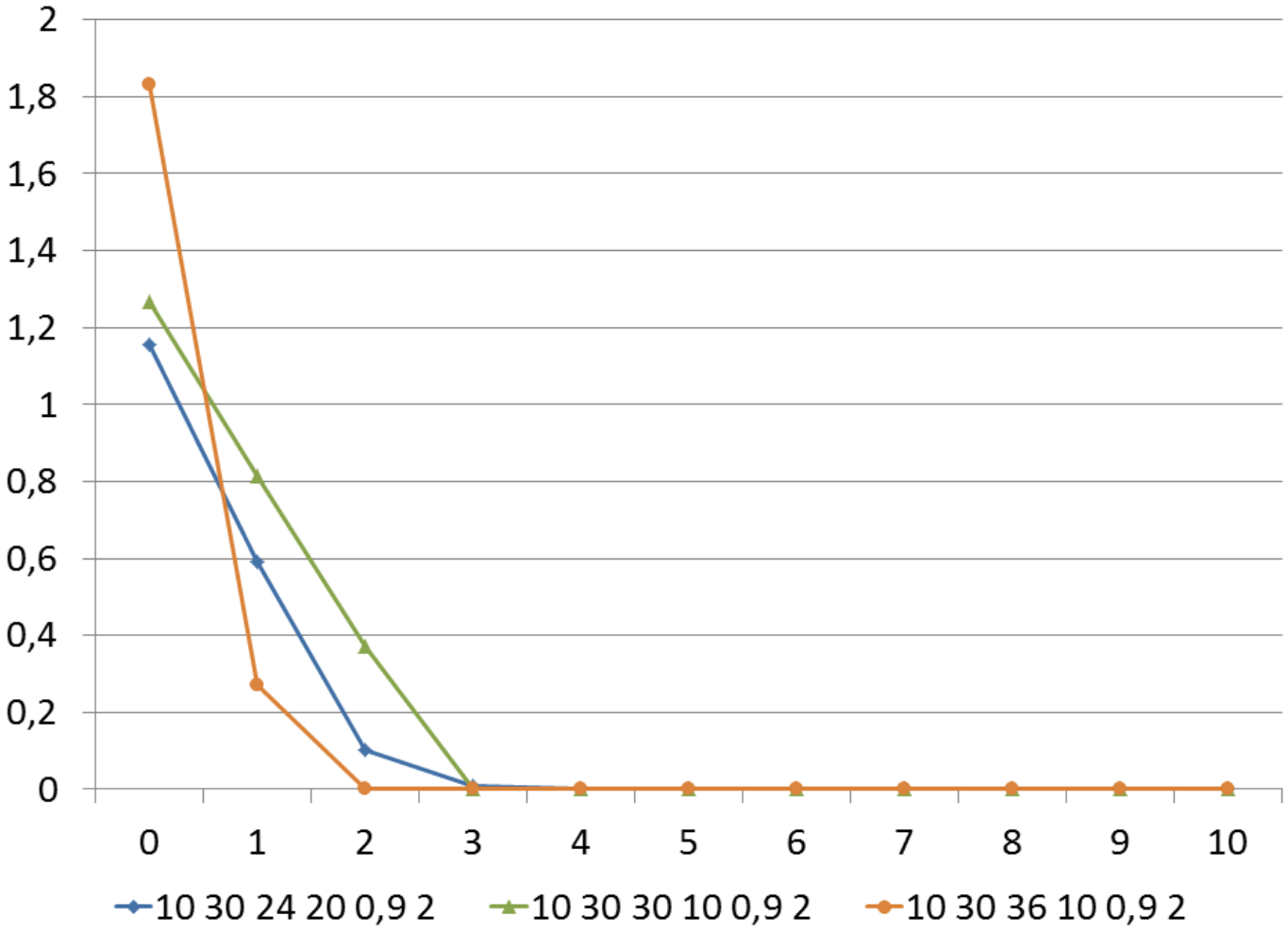

Computational results

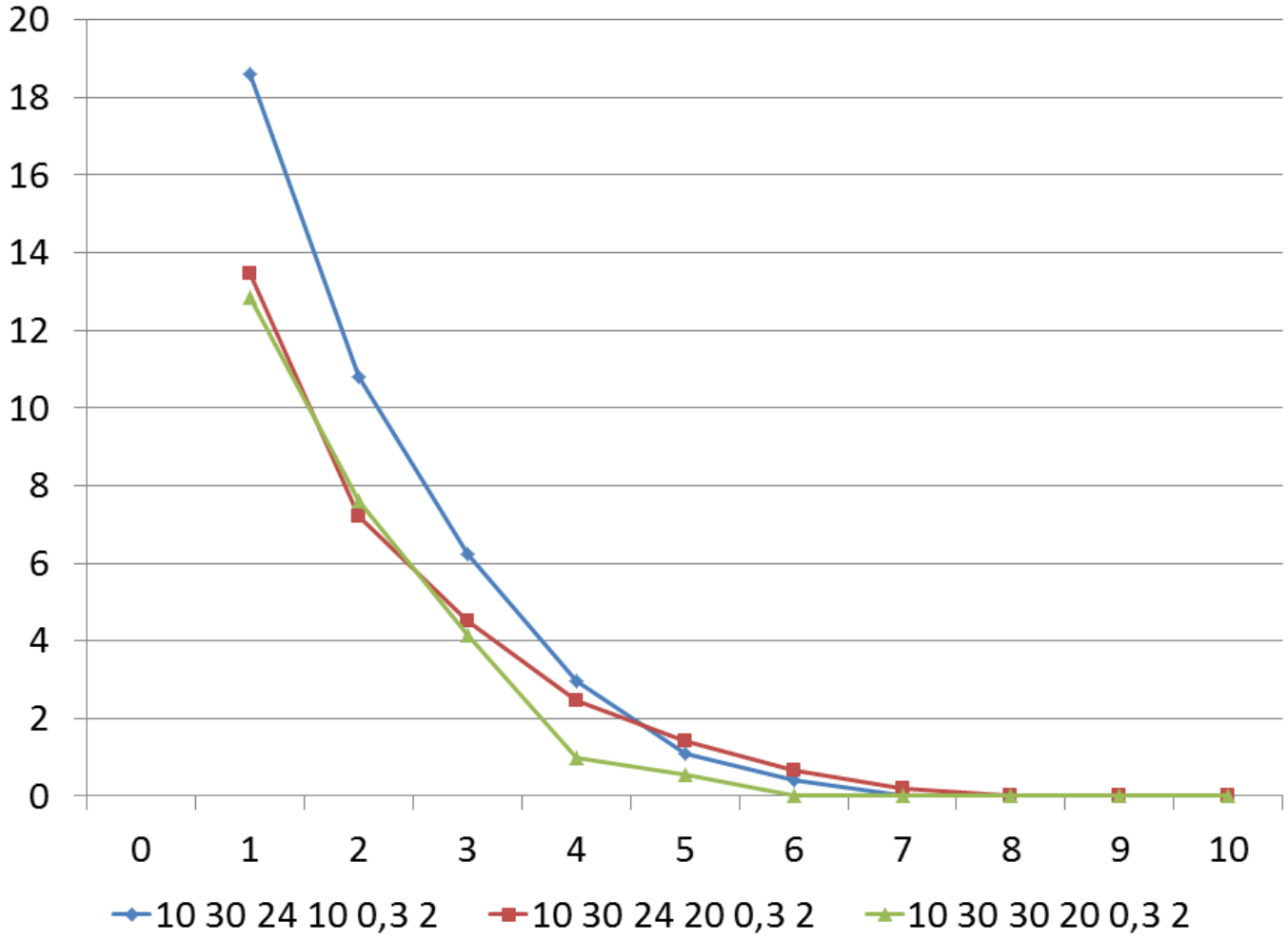

Conclusions and future research

Conclusions

- Truck scheduling problem at cross-docking terminals
- Time-indexed (integer programming) formulation
- Mixed mode versus exclusive mode
- Number of gates to be changed from exclusive to mixed mode

Future research

- Special case of the problem with $p_i = p \Rightarrow$ Generalisation of $Pm|r_i, \tilde{d}_i, p_i = p| \sum w_i C_i$ (complexity open)
- Extension: as an alternative, pallets can also be stocked at the gate

Future research: staging

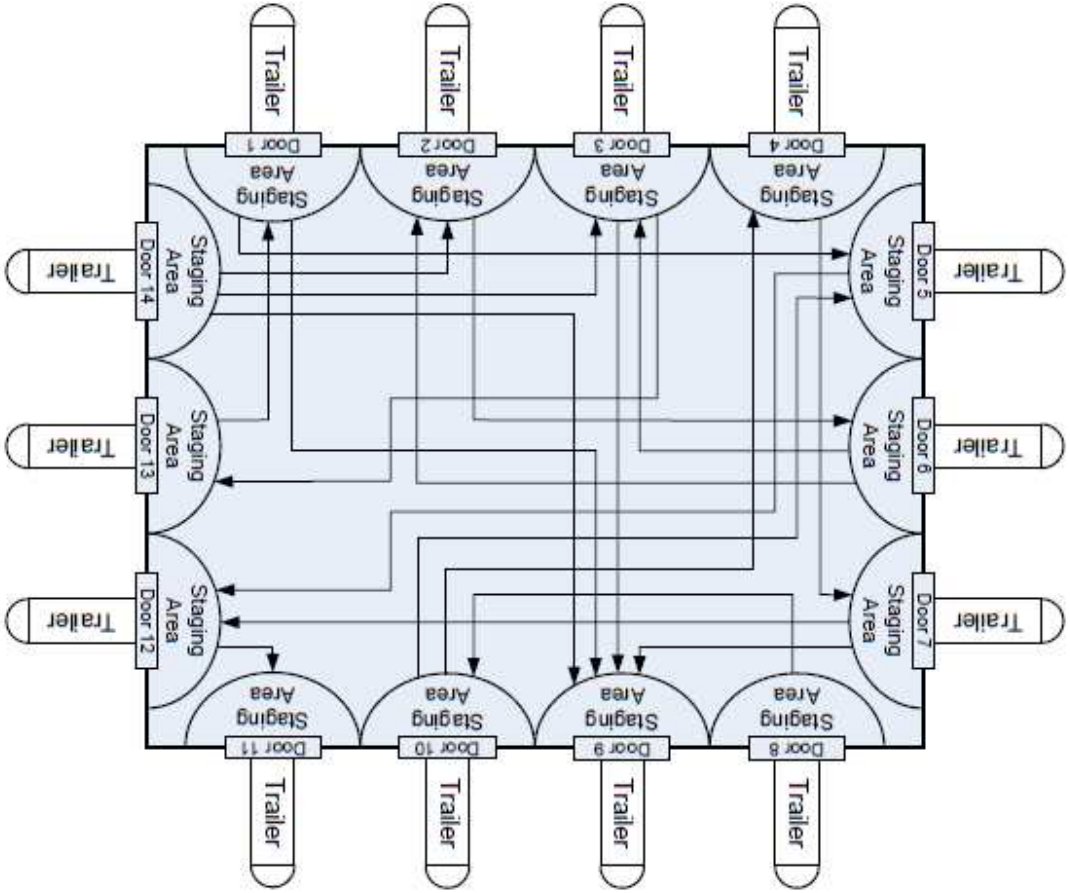

Shakeri M. Truck scheduling problem in logistics of crossdocking. Technical Report NTU-SCE-1101. Nanyang Technological University.

Questions?