Exploring High Throughput Computing Paradigm for Global Routing

Yiding Han, Dean Michael Ancajas,
Koushik Chakraborty, Sanghamitra Roy
USU BRIDGE Lab

UtahState University

Routing

- Problem
  - Given a placement, and a fixed number of metal layers, find a valid pattern of horizontal and vertical wires that connect the terminals of the nets
  - Levels of abstraction:
    - Global routing
    - Detailed routing
- Objectives
  - Cost components:
    - Congestion (relates to routability)
    - Area (channel width)
    - Wire delays
    - Number of layers (fewer layers → less expensive)
    - Execution time
    - Additional cost components: number of bends, vias

Routing Anatomy

Top view

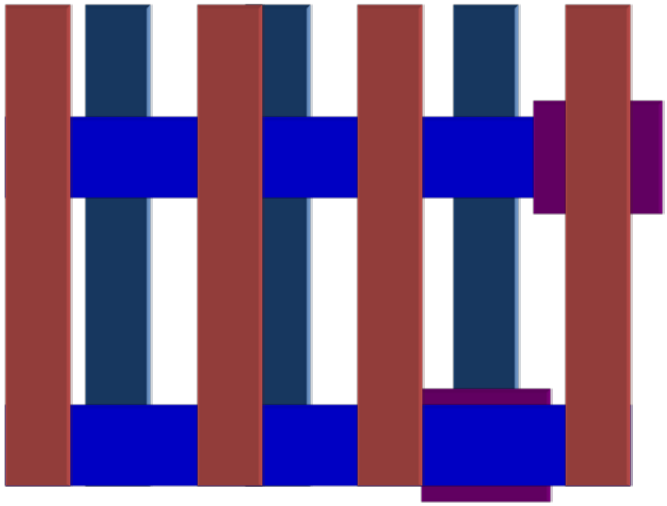

3D view

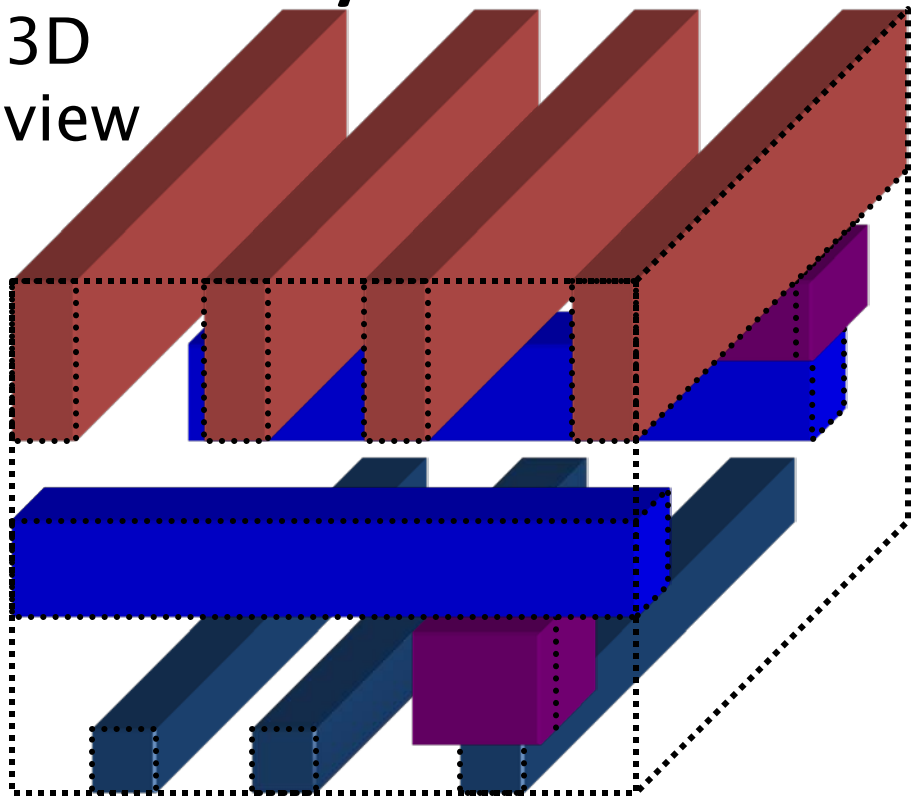

Symbolic Layout

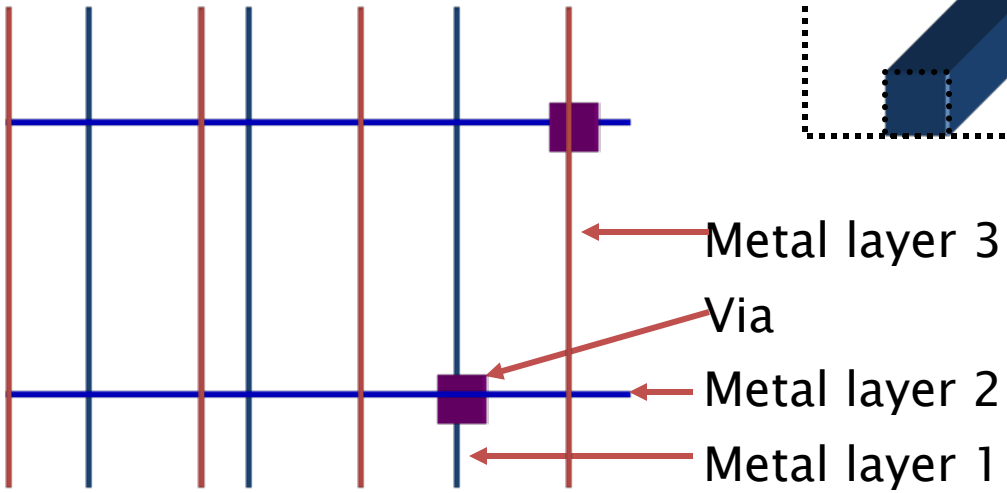

Note: Colors used in this slide are not standard

Global vs. Detailed Routing

- **Global routing**
  - Input: detailed placement, with exact terminal locations
  - Determine "channel" (routing region) for each net
  - Objective: minimize area (congestion), and timing (approximate)
- **Detailed routing**
  - Input: channels and approximate routing from the global routing phase
  - Determine the exact route and layers for each net
  - Objective: valid routing, minimize area (congestion), meet timing constraints
  - Additional objectives: min via, power

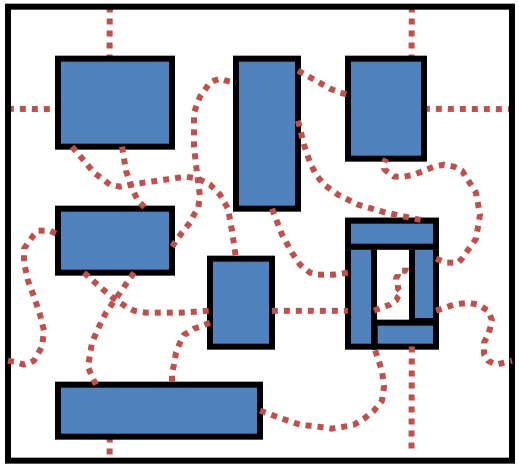

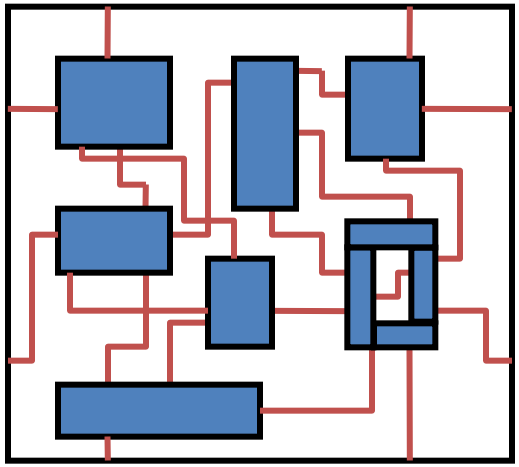

Figs. [©Sherwani]

Global Routing

- Increasing complexity
  - Explosion in design rules
  - Additional constraints
- Exploit parallelism to tackle complexity
  - Multi-core solution
    - Liu DAC '10, PGRIP DAC '10
  - Massive parallel architecture (GPU)
    - *This work.*

Parallel Global Routing

- Partition-based Parallelism
  - Cut routing grid into partitions
  - Route each partition in parallel
  - Load balancing
  - Cut on long nets
- Net-level Parallelism
  - Individual nets divided across many threads
  - Route nets simultaneously, good load balancing
  - Shared resources among nets cause collision
  - Collision degrades route quality, convergence speed

Exploit net-level parallelism

Routing Map:

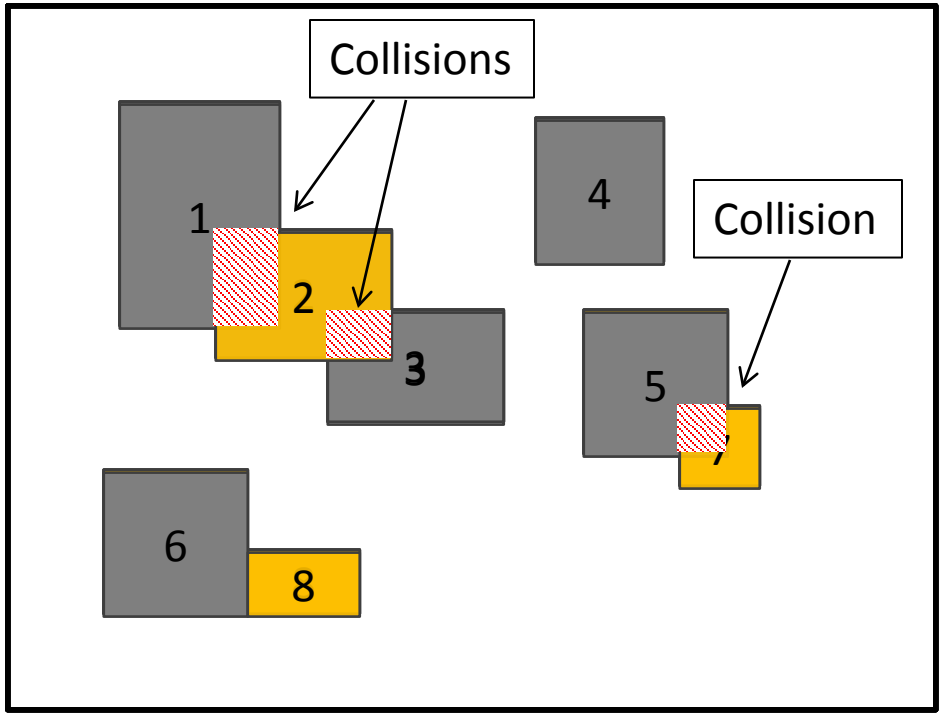

- Parallel Route WITHOUT net dependencies
  - Identify conflicts with subnets
  - Schedule subnets in original order
  - Collision-free route

Un-routed subnets
Scheduled subnets
Routed subnets

Task Queue:

Subnet 1	Subnet 2	Subnet 3	Subnet 4	Subnet 5	Subnet 6	Subnet 7	Subnet 8

Design Flow

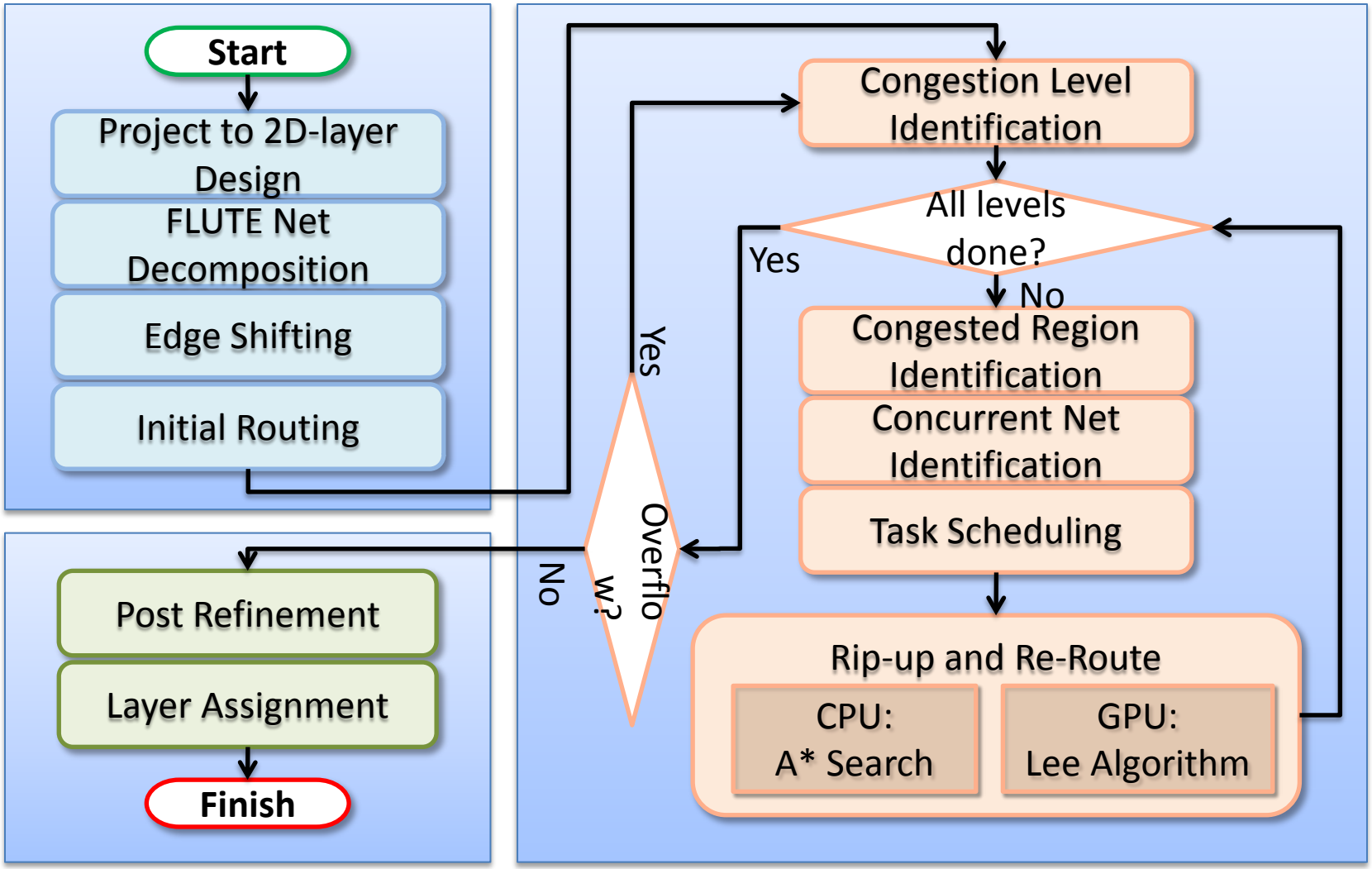
Start
Project to 2D-layer Design
FLUTE Net Decomposition
Edge Shifting
Initial Routing
Congestion Level Identification
All levels done?
Yes
No
Congested Region Identification
Concurrent Net Identification
Task Scheduling
Rip-up and Re-Route
CPU: A* Search
GPU: Lee Algorithm
Overflow?
Yes
No
Post Refinement
Layer Assignment
Finish

GPU-CPU Hybrid

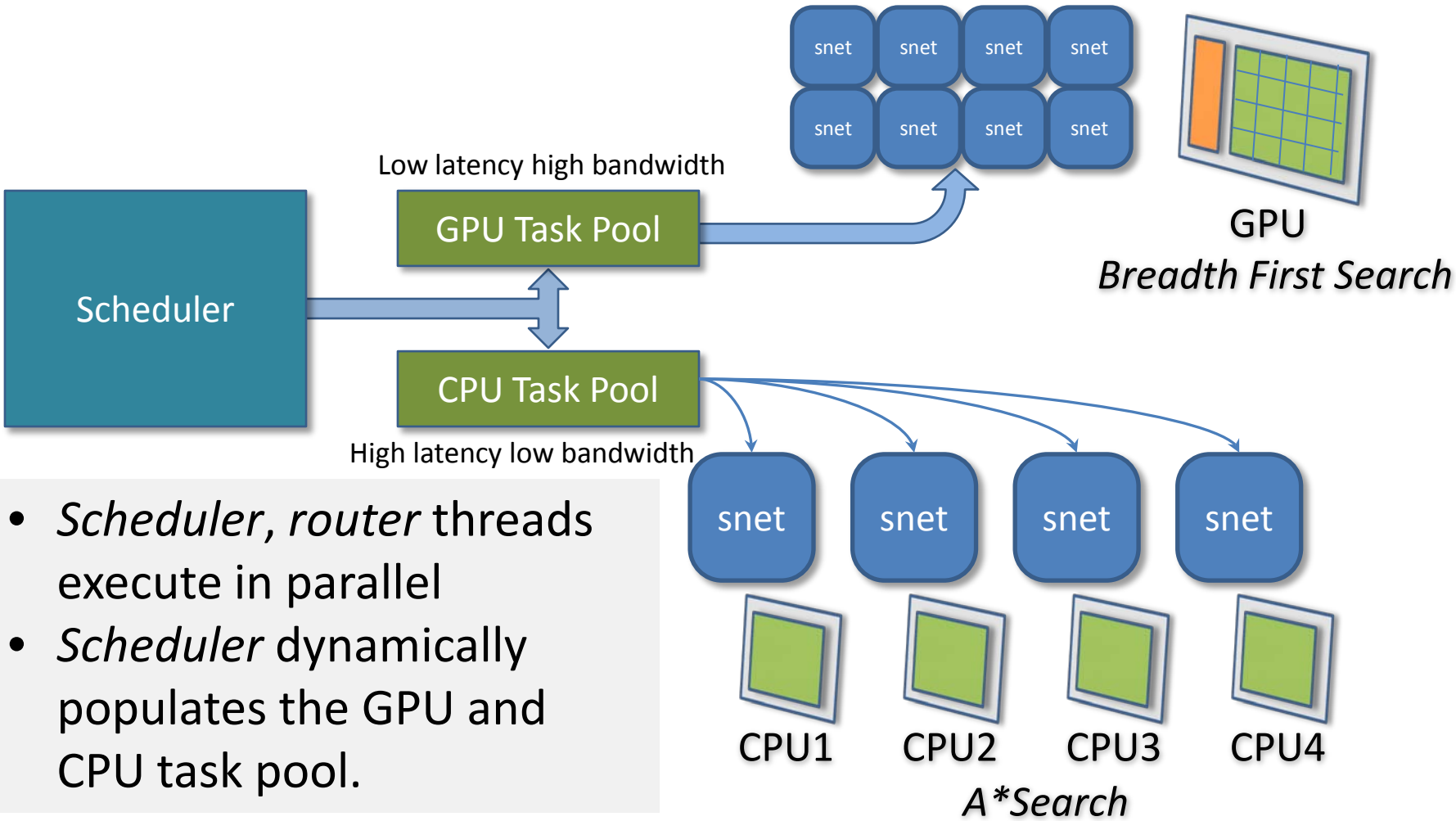

- *Scheduler*, *router* threads execute in parallel
- *Scheduler* dynamically populates the GPU and CPU task pool.

Scheduler

- Build net dependency tree
  - Routing order dictates dependencies among routing tasks.
- Identifies concurrent subnets
  - Subnets without overlapping routing region.
- Dynamically examine the dependencies among nets
  - Release concurrent workload on-the-run.

Net Dependency Construction

- Tile coloring to uncover parallelism in ordered subnet queue

Net order: C > F > B > E > G
D > C > F > B > E > G > A

Concurrent Nets: {B, C, F, G}
Concurrent Nets: {D, A}

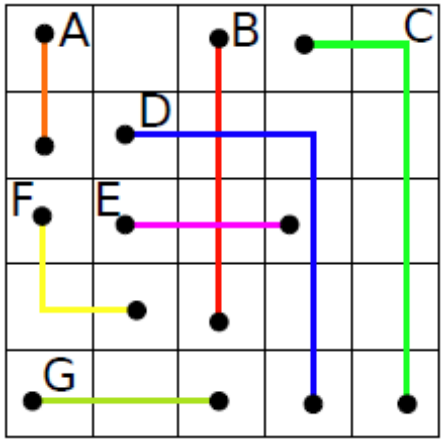

Routing Map

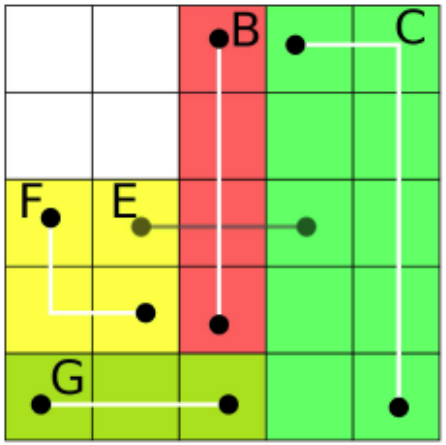

Colored Tiles

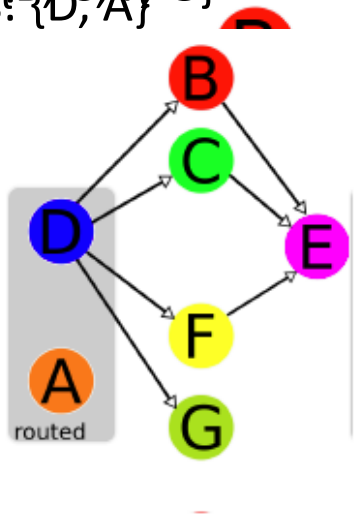

Net Dependency Tree

Scheduler Implementation

- Recursively uncover net dependency
- Producer-consumer relation with routing threads
- Optimizations
  - Reduce search area: only search within the congested region
  - Scheduling window: restrict the number of nets being examined

GPU Global Router

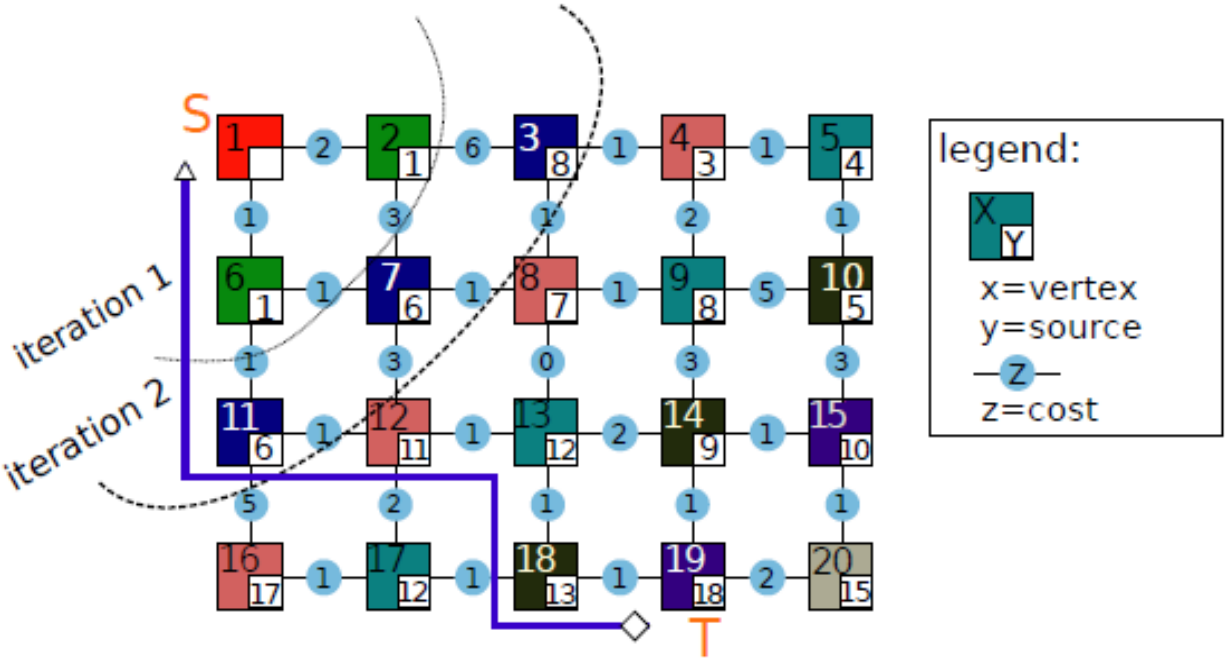

- Breadth-First Search on GPU.
- Exhaust searching frontiers in routing region to find lowest cost path.

Evaluation Platform

- CPU: Intel Q6600 Kentsfield
  - Quad-core 2.4GHz
  - Cache 2 x 4 MB
- GPU: Nvidia Geforce GTX 470 (Fermi)
  - 448 Cuda cores
  - 1280 MB GDDR5
  - Driver Ver. 270.41.19
  - CUDA Toolkit 4.0
- System Memory: 8GB DDR2
- OS: CentOS 5.6 Final (64-bit)

Results

Speedup compared to NTHU-Route 2.0 on ISPD benchmarks

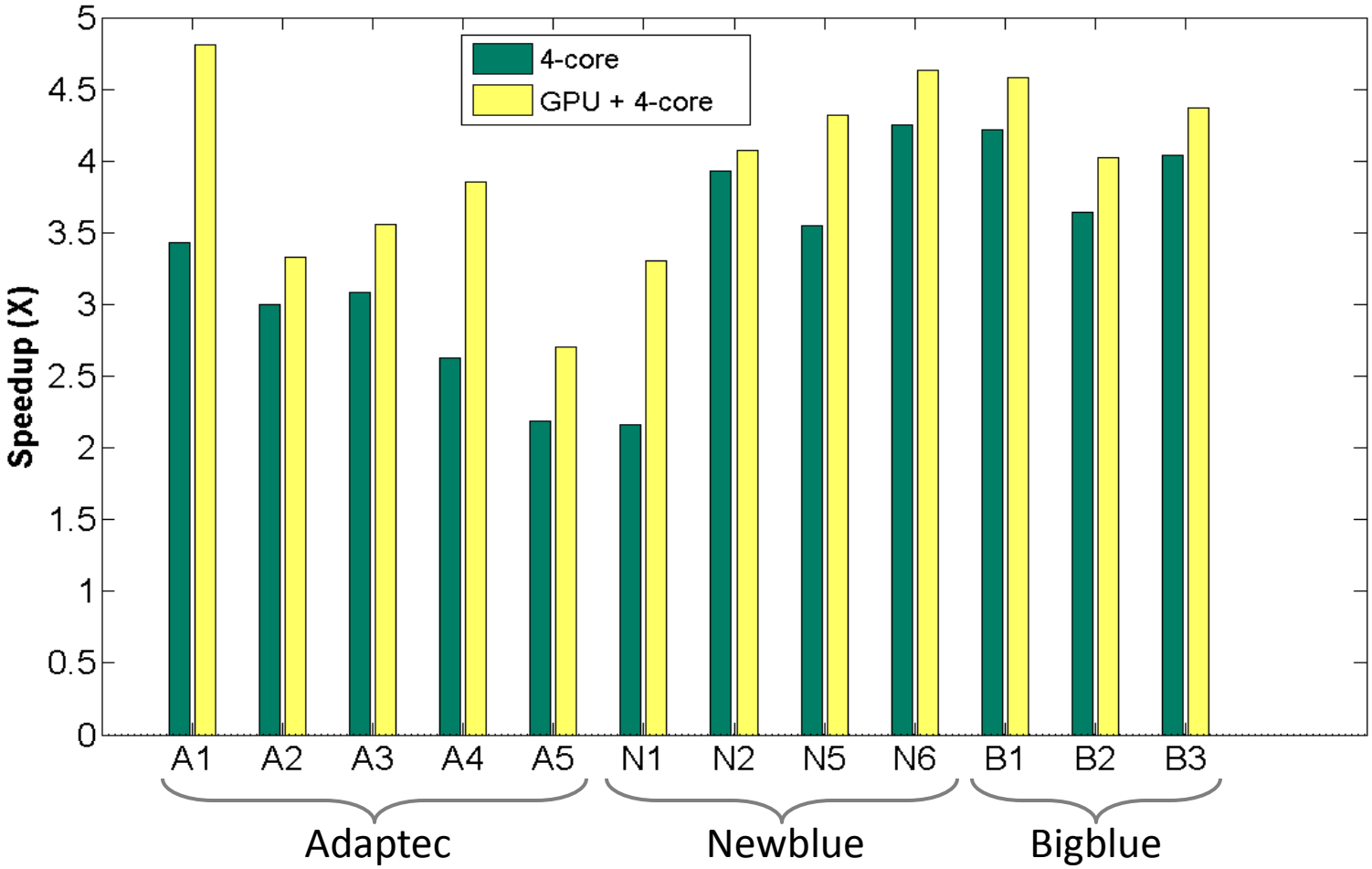

Conclusion

- GPU-CPU hybrid global router to exploit concurrency.
- Novel scheduler design to dynamically uncover net-level parallelism.
- Promising speedups with comparable solution quality

Questions