4th Workshop on Mobile Cloud Networking,
June 19th, 2014, Lisbon, Portugal

MCN
Mobile Cloud Networking

Cloudified IP Multimedia Subsystem (IMS) for Network Function Virtualization (NFV)-based architectures

Giuseppe Carella, Marius Corici, Paolo Crosta, Paolo Comi, Thomas Michael Bohnert, Andreea Ancuta Corici, Dragos Vingarzan, Thomas Magedanz

1: {giuseppe.a.carella, thomas.magedanz}@tu-berlin.de
2: {marius-iulian.corici, andreea.ancuta.corici, dragos.vingarzan}@fokus.fraunhofer.de
3: {paolosecondo.crosta, paolomaria.comi}@italtel.com
4: thomas.bohnert@zhaw.ch

TU Berlin
http://www.av.tu-berlin.de/

Agenda

- Background and motivation:
  - The IP Multimedia Subsystem (IMS)
  - Network Function Virtualization (NFV)
- Virtualized IMS deployment models
- IMS as a Service (IMSaaS) architecture
- Experimental results
- Conclusion and future works

The IP Multimedia Subsystem (IMS)

- ***The IP Multimedia Subsytem (IMS)*** is the overlay architecture for session control in all-IP Next Generation Networks (NGNs) using the Session Initiation Protocol (SIP) for signaling.
- ***Proxy, Interrogating and Serving Call Session Control Function*** (P/I/S-CSCF) mainly used for the authentication and authorization of subscribers, and also for the call signaling.
- ***Home Subscriber Server (HSS)*** the central repository for end user subscription profiles, uses external databases for storing the data, exposed to other nodes via Diameter
- ***Application Servers (AS)*** are usually used for extending the standard telco service offering
- ***Subscriber Location Function (SLF)*** used for load balancing reasons

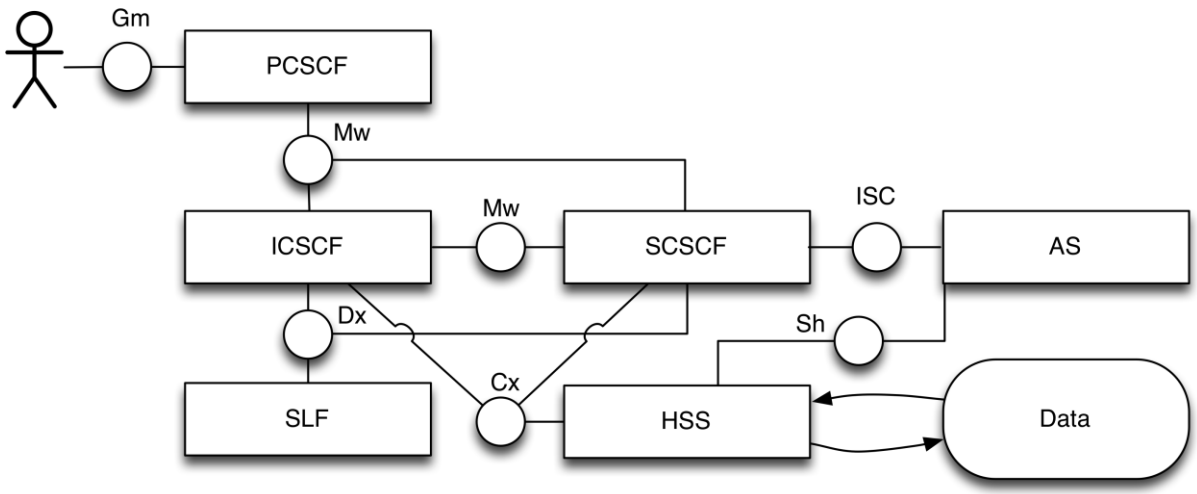

What is Network Functions Virtualization (NFV)

- The objective of NFV is to translate the classic network appliances to software modules
  - Running on high volume servers with high volume storage
  - Interconnected by generic high volume switches
  - Automatically orchestrated and remotely installed

- NFV is a novel paradigm that presumes that the network functions:
  - Are implemented only as software (programs)
  - Can run on top of common servers

- NFV implies that network functions:
  - Can be moved as required
  - Do not require special equipment

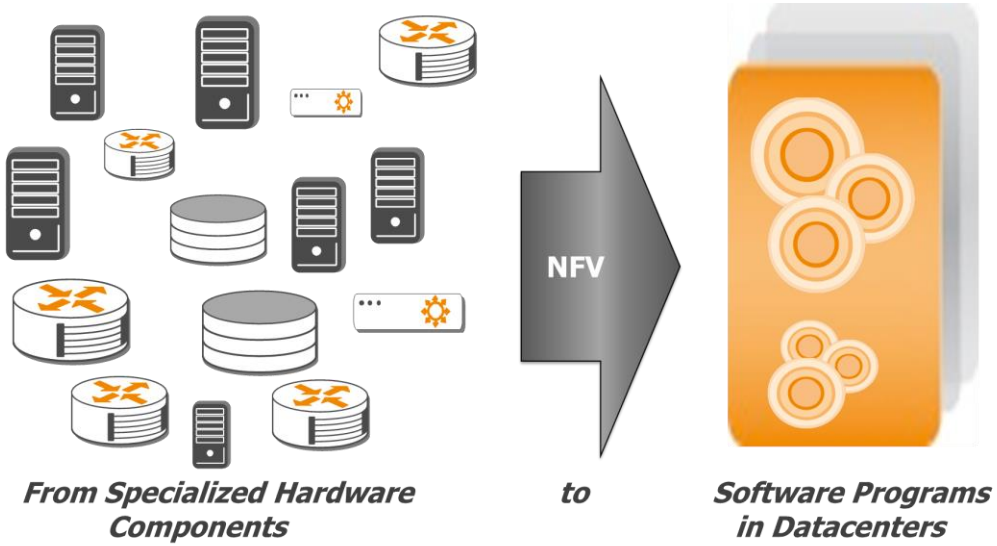

Why NFV applied to IMS

- Cloud Computing as enabler of NFV
  - With pay-per-use cloud services risk of false investments can be minimized
    - Reduced CAPEX – only pay per use
  - Elasticity for increasing or decreasing available resources on demand. It is one of the most important properties of cloud infrastructures

- In IMS there is high traffic fluctuation, services mostly used only during the day, overprovisioning is required for managing peak of load
- Introducing flexibility in network management operations
- Optimizing resource utilization
- Introducing pay as you go network infrastructures

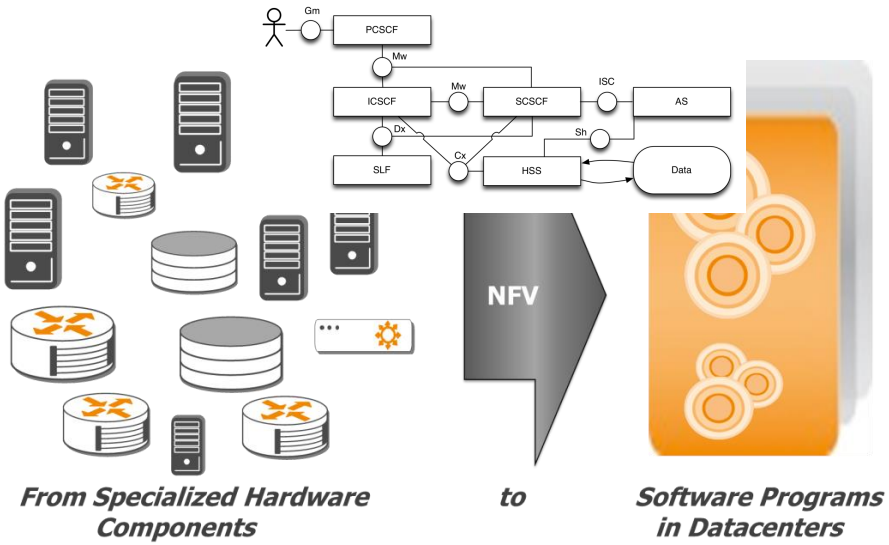

Agenda

- Background and motivation:
  - The IP Multimedia Subsystem (IMS)
  - Network Function Virtualization (NFV)
- Virtualized IMS deployment models
- IMS as a Service (IMSaaS) architecture
- Experimental results
- Conclusion and future works

NFV-based architecture virtualized-IMS (vIMS)

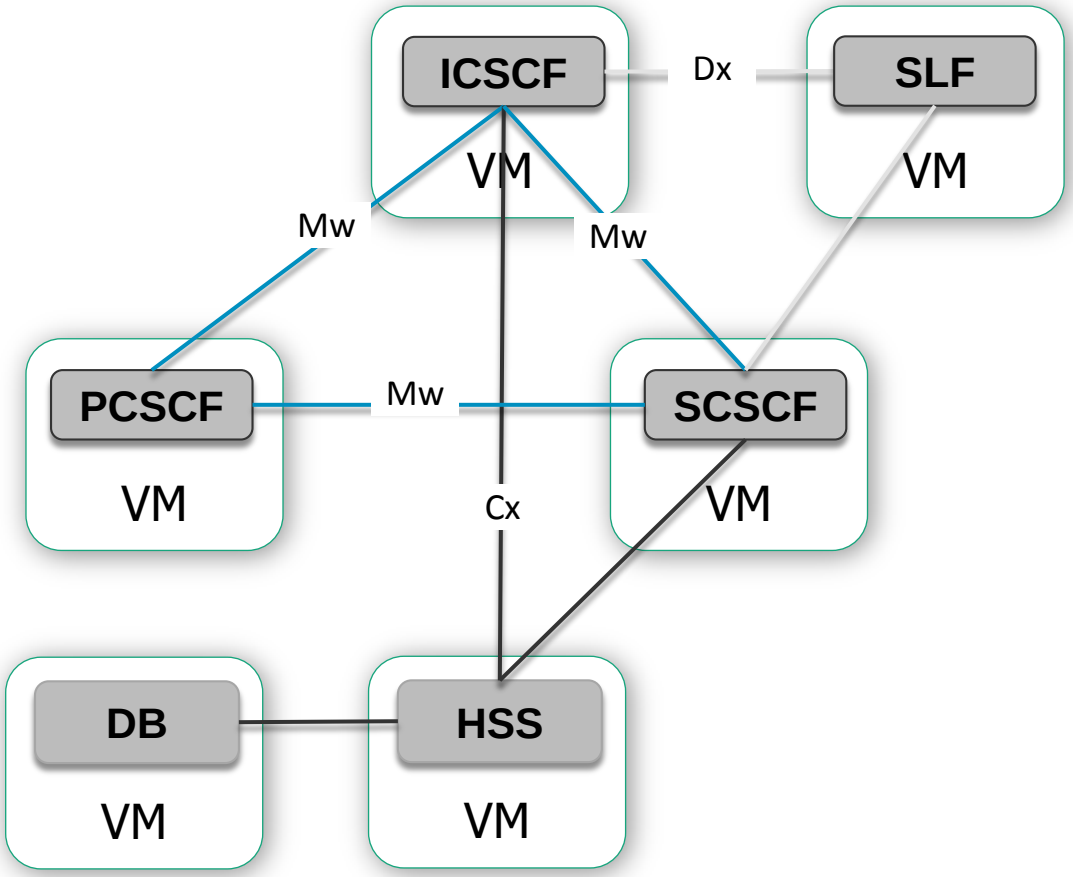

- Different load balancing mechanisms for different components
  - DNS load balancing between:
    - UE and PCSCF
    - PCSCF and ICSCF
  - SLF between:
    - ICSCF and HSS
    - SCSCF and HSS
  - Capabilities set between:
    - ICSCF and SCSCF

- Each time an instance of a network element is created / deleted, the Orchestrator has to update the different load balancers
  - Needed an API to dynamically change the topology

NFV-based architecture merge-IMS

- Separation of the functionality based on cloud principles
  - Load Balancer (LB) – determining for each subscriber which is the scheduled worker
  - Worker (P/I/S-CSCF, HSS Front-end) – Stateless component
  - State (DB) – a synchronized state entity across worker

- Advantages
  - Reduced delay
  - Reduced number of interfaces
    - Less encode/decode
    - Less synchronization points
  - One step processing
  - Uniform components
    - Reduced complexity

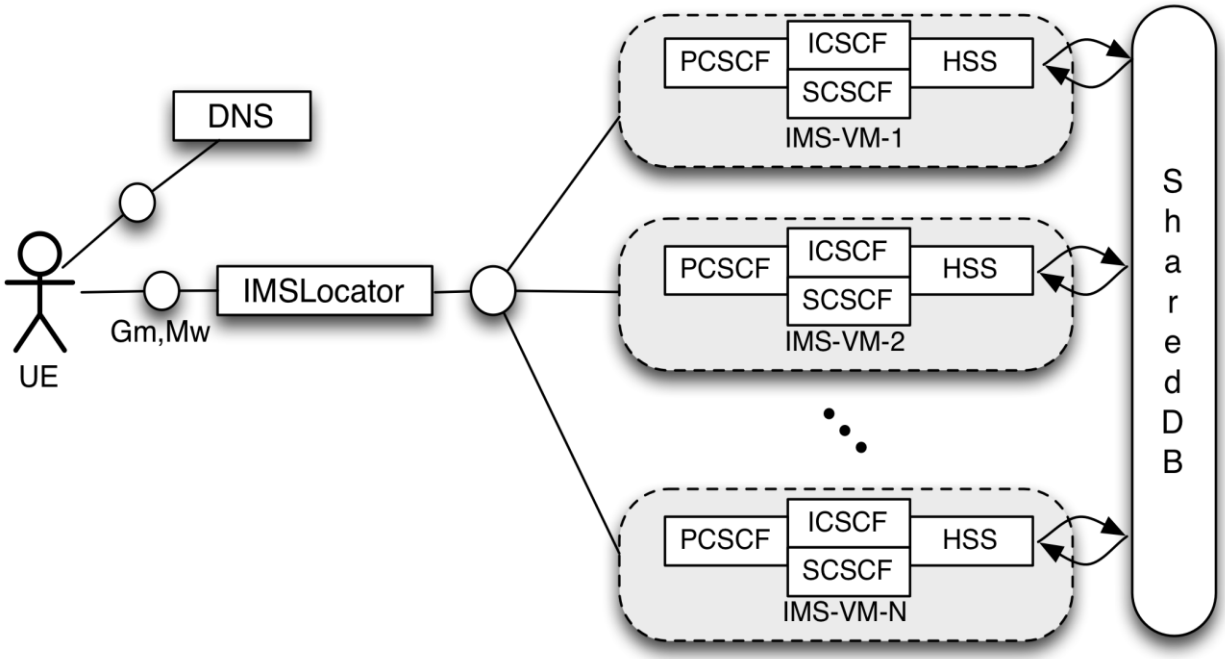

NFV-based architecture split-IMS

- Each network function split in three main components:
  - NFBalancer: acting as a load balancer
  - NFWorkers: stateless components implementing the specific network functions
  - Shared Memory: used for storing persistent information
- High complexity in managing the different functions
- High availability and high scalability
- Horizontal scalability at the level of a single network function
- Increased delay due to the shared level of memory

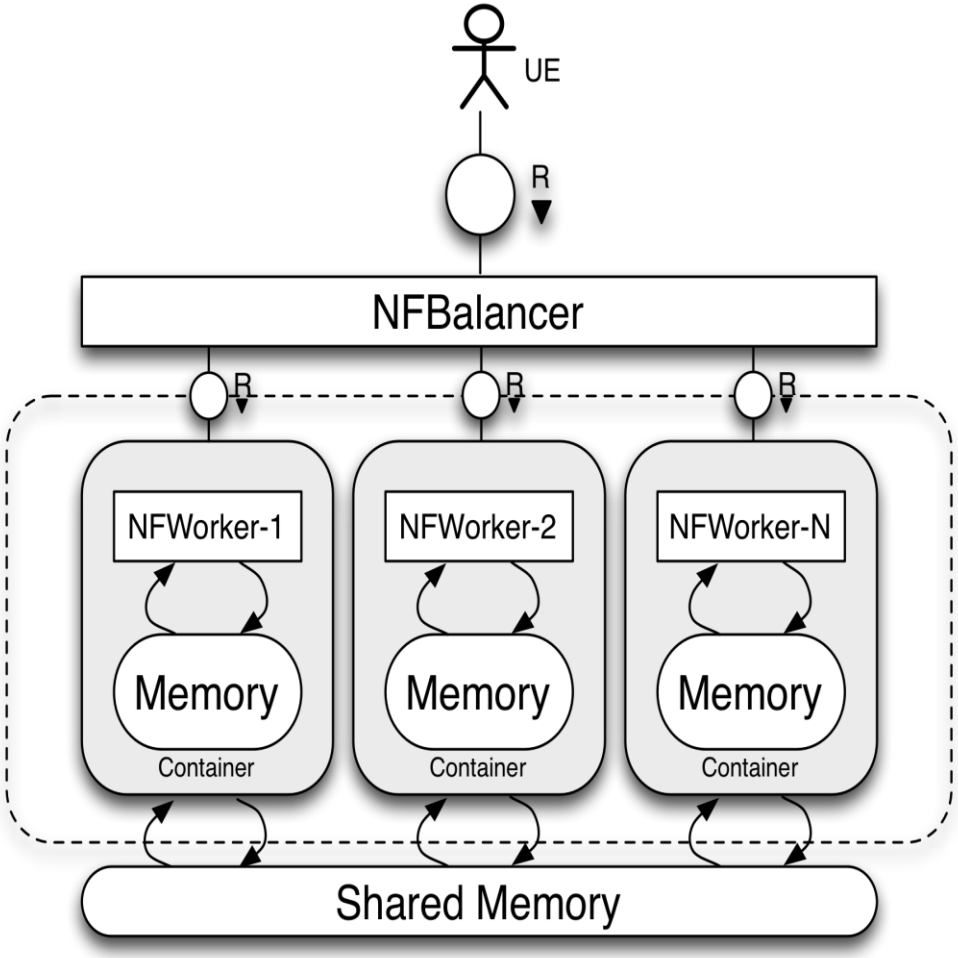

Agenda

- Background and motivation:
  - The IP Multimedia Subsystem (IMS)
  - Network Function Virtualization (NFV)
- Virtualized IMS deployment models
- IMS as a Service (IMSaaS) architecture
- Experimental results
- Conclusion and future works

MCN Architecture

- ***Service Manager:*** provides an external interface to the Enterprise End User and a list of available services (Service Catalog). It is in charge of the management of the different ***Service Orchestrators*** of a particular tenant

- ***Cloud Controller:*** supports Service Orchestrator's (SO) end-to-end provisioning and life cycle management needs of atomic and supporting services

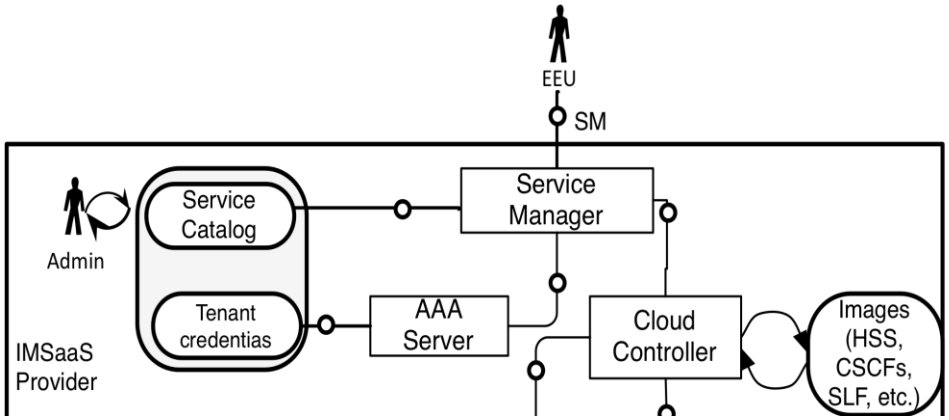

Architecture model for IMSaaS

- The ***Enterprise End User*** requests the instantiation of a new IMS instance to the Service Manager
- The ***Service Orchestrator Decision – Execution*** manages the different lifecycle of the IMS instance components.
- Monitoring, Load Balancing, DNS, Rating, Charging and Billing, SLA as ***supporting services*** during the all stages of the lifecycle.

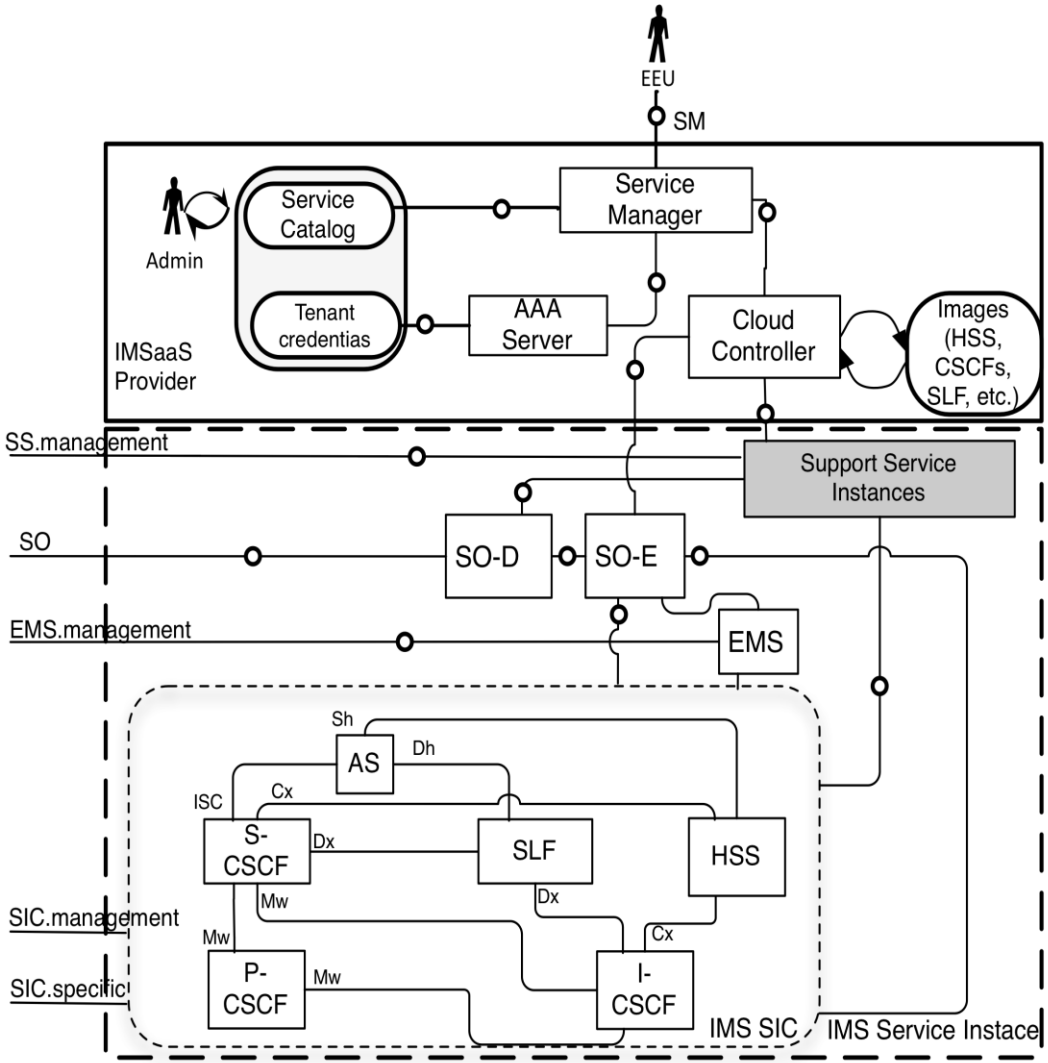

Lifecycle management of an IMS Service Instance

- The Enterprise End User requests the instantiation of a new IMS instance to the Service Manager
- The SM deploys an SO instance on the CC
- Once running the SO deploys the required virtual machines and networks with an Infrastructure Topology Graph
- Once those are running the SO provision the IMS software which is then started and ready to be used by the users

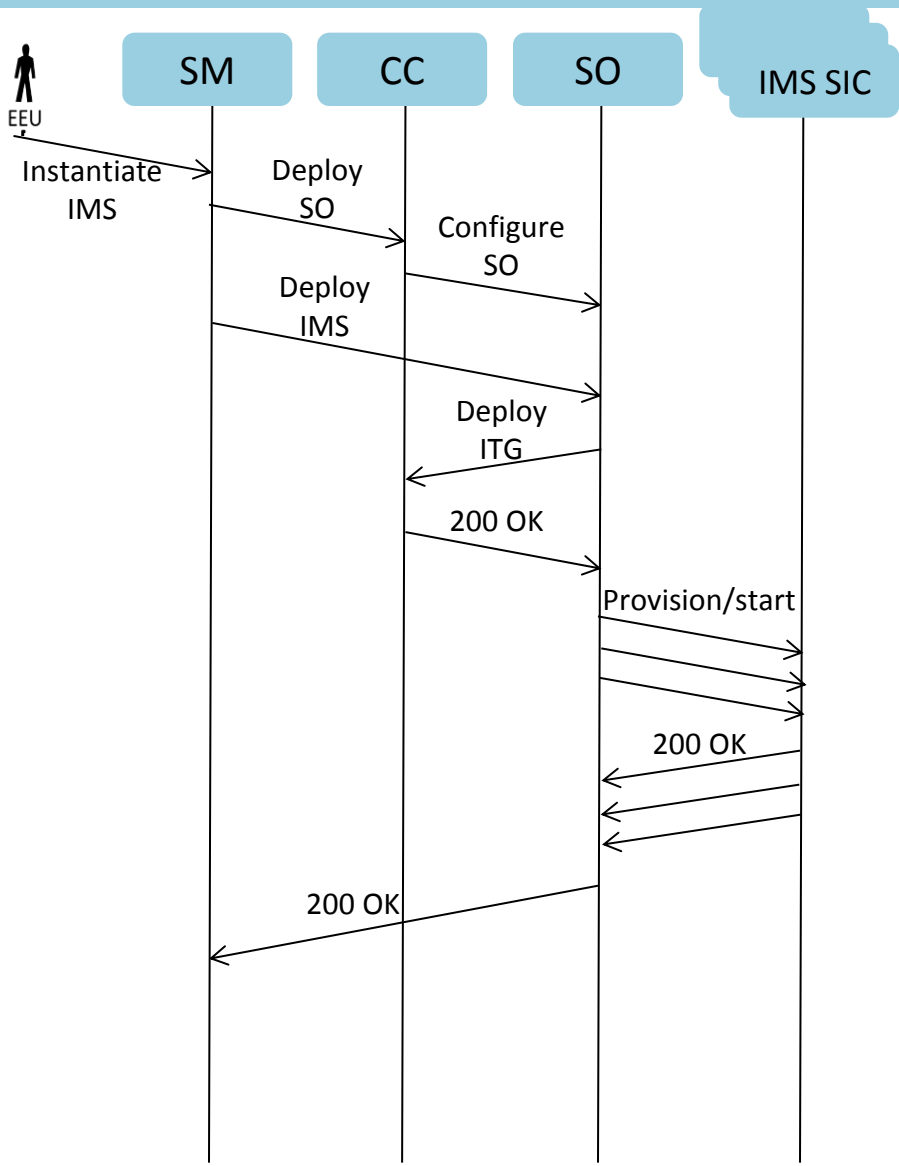

Agenda

- Background and motivation:
  - The IP Multimedia Subsystem (IMS)
  - Network Function Virtualization (NFV)
- Virtualized IMS deployment models
- IMS as a Service (IMSaaS) architecture
- Experimental results
- Conclusion and future works

Testbed for the experimental results

5VMs:

- 1CPU, 2GB RAM → Amazon costs ~0.04 €/h
- 8760 (h/y) * 0.04 €/h * 5 = ~1750 €/y

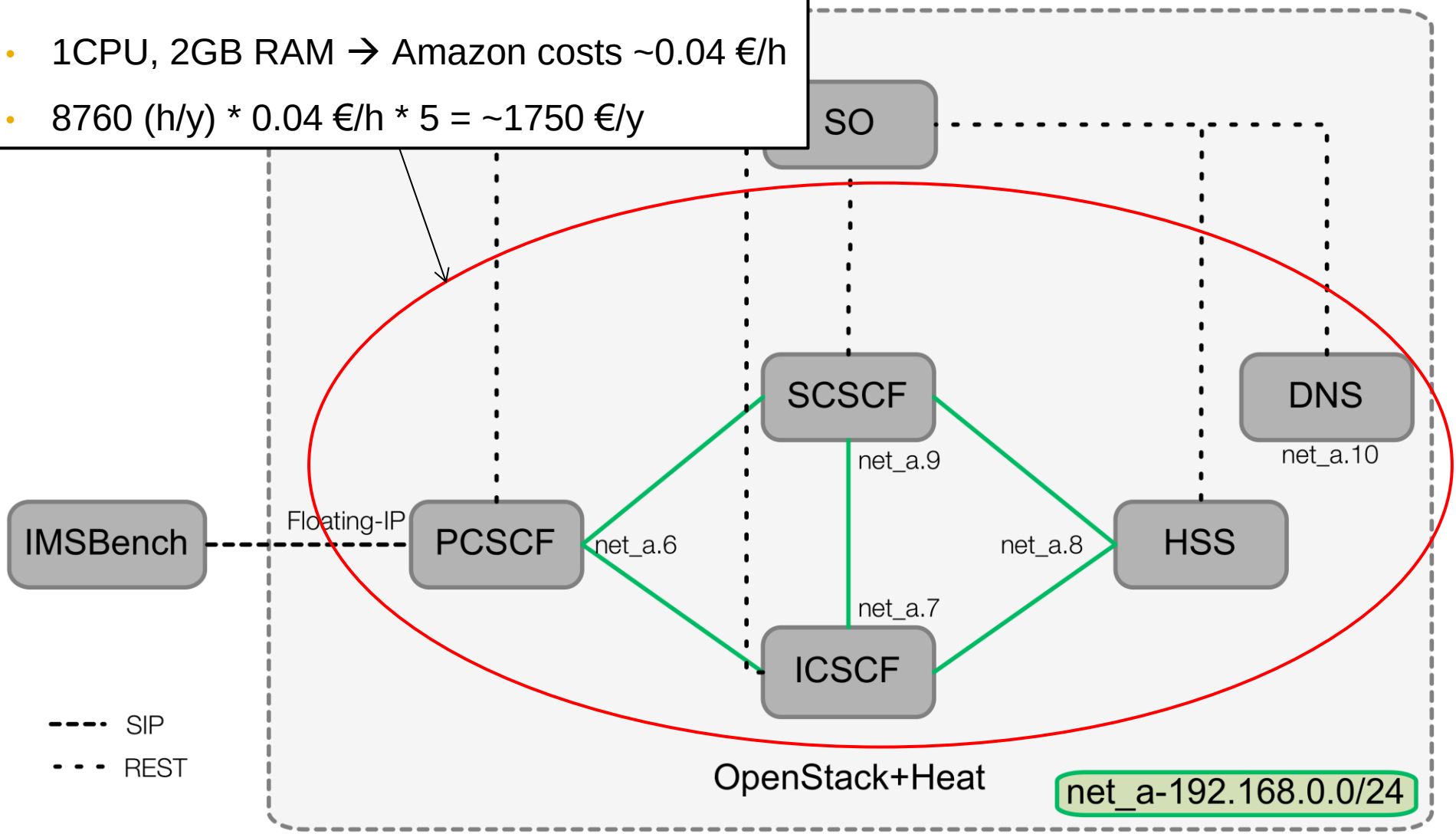

Toolkits used for the experimental results

MCN
Mobile Cloud Networking

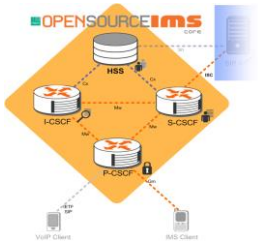

Fraunhofer ***Open Source IMS (OSIMS) Core*** System as implementation of the xCSCFs components

Fraunhofer ***OpenEPC***-HSS as implementation of the HSS component

Fraunhofer ***OpenSDNCore*** – implementing the Service Orchestrator logic, interfacing with Heat and OpenStack for provisioning of virtual resources

OpenStack together with Heat simulating the cloud controller functionalities

IMSBench used for simulating signalling traffic

Benchmarking phases

- ***Three phases:***
  1. Registration of a pool of subscribers
  2. Stir phase for preparing the system
  3. Real benchmark of the System Under Test (SUT). In this case a mix of scenarios are evaluated: Registration, de-registration, call setup, messaging.

Phase	Initial CPS	Number of steps	Increase per step	Duration	IHS
Pre-reg	40	1	0	20.000 max requests	10
Stir	5	3	5	100 s/steps	10
Bench	10	6	10	300 s/steps	5

vIMS – load tests (1/2)

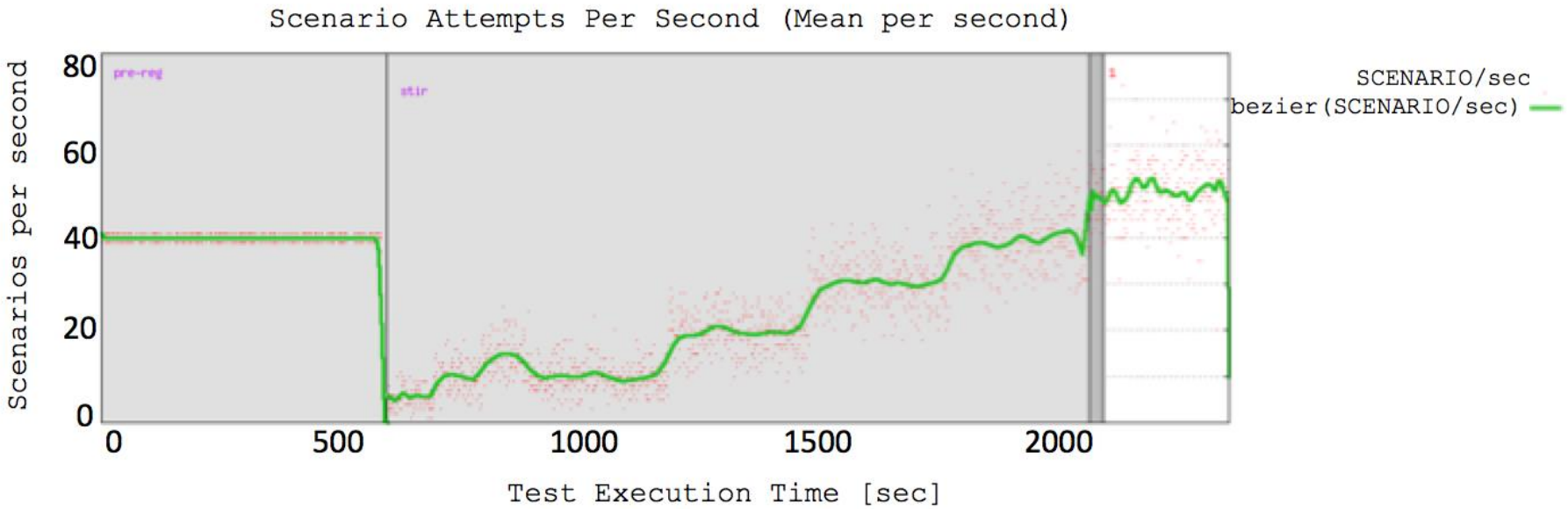

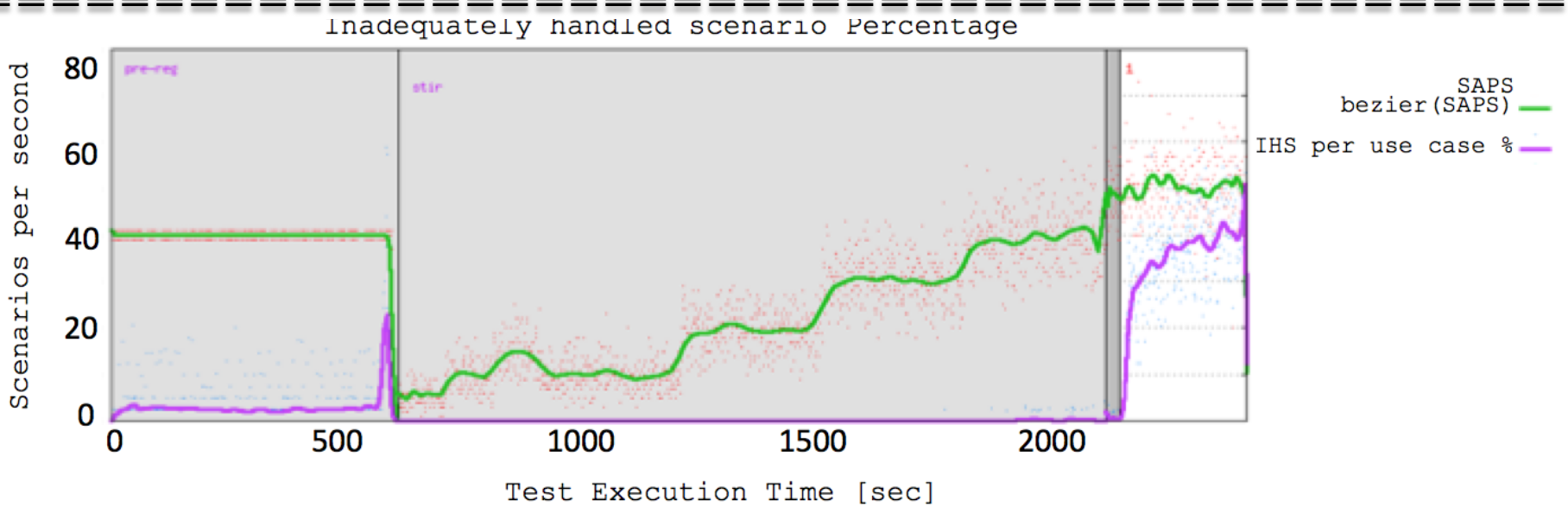

vIMS – load tests (2/2)

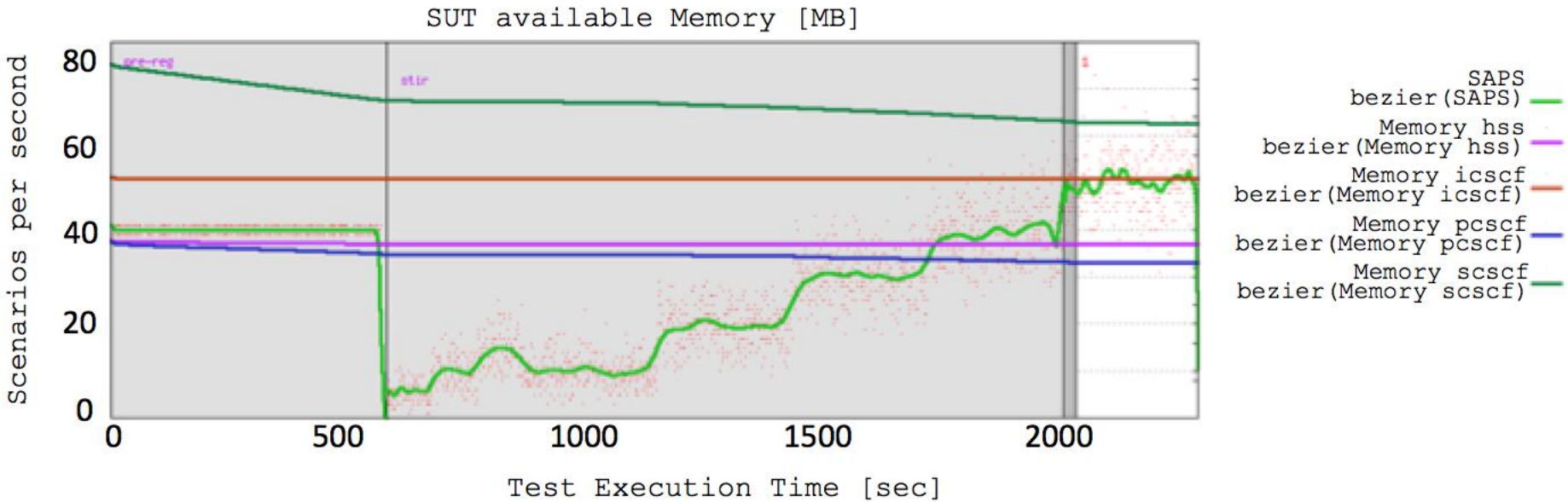

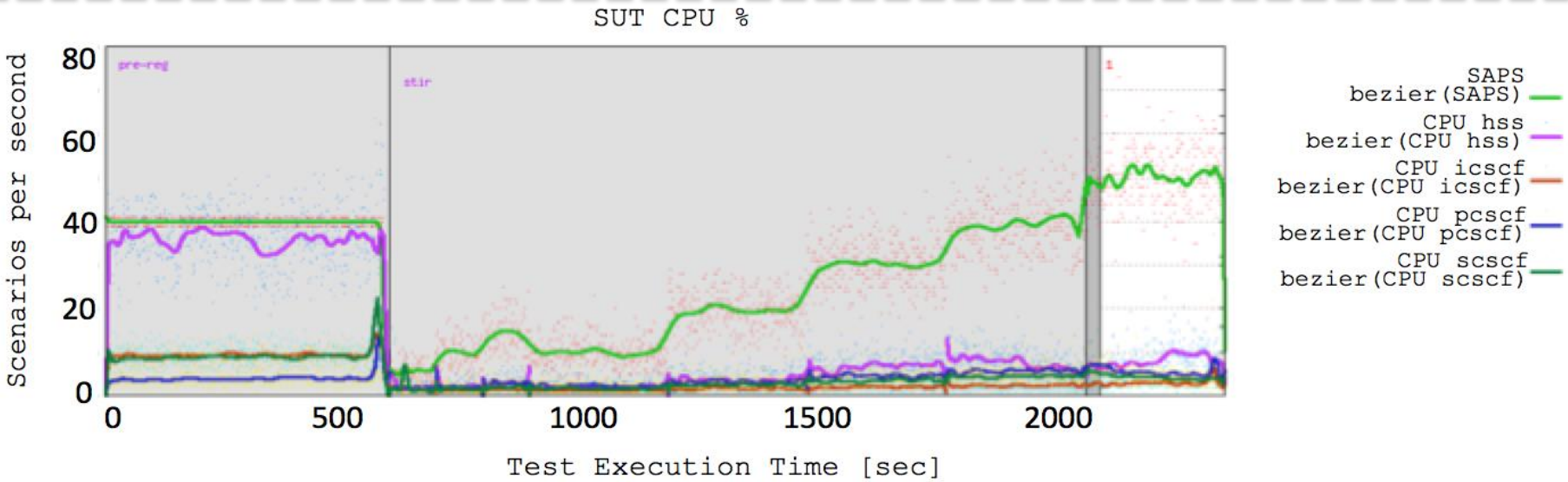

Agenda

- Background and motivation:
  - The IP Multimedia Subsystem (IMS)
  - Network Function Virtualization (NFV)
- Virtualized IMS deployment models
- IMS as a Service (IMSaaS) architecture
- Experimental results
- Conclusion and future works

Conclusion and Future works

MCN
Mobile Cloud Networking

- ***Conclusion***
  - A possible architecture for offering IMS-as-a-Service has been proposed. It gives the possibility to deploy on-demand an instance of the IMS platform
  - Based on cloud principles three different deployment models have been proposed
  - With a very limited number of entities a large number of subscribers can be served

- ***Future works***
  - Integration with public clouds
  - Enable horizontal scalability for specific components (for instance HSS using SLF)
  - Introduction of SIP AS

MCN
Mobile Cloud Networking

Cloudified IP Multimedia Subsystem (IMS) for Network Function Virtualization (NFV)-based architectures

Thank you!
Questions ?!?

TU Berlin
http://www.av.tu-berlin.de/

