Capacity/Cost Tradeoffs in Optical Switching Fabrics for Terabit Packet Switches

D. Cuda[+], R. Gaudino[+], Guido Gavilanes[+],

F. Neri[+], G. Maier[*], C. Raffaelli[◊], M. Savi [◊]

[+] : Politecnico di Torino

[*] : Politecnico di Milano

[◊]: Universita di Bologna

Terabit packet switches?

- Internet traffic demands are growing
- Future switches/routers will be required to work at higher aggregate bitrates
- Switches/routers perform packet forwarding in electronics
  - Handling more interfaces at higher bitrates
  - They become more complex
  - More power is dissipated
  - Huge amounts of data having to be switched in a single timeslot, inside a single box of equipment.

How limitations have been mitigated

- Switching has evolved with the help of
  - New architectures, distributed control schemes
  - Using optics to interconnect different domain levels (linecards, shelfs, racks)

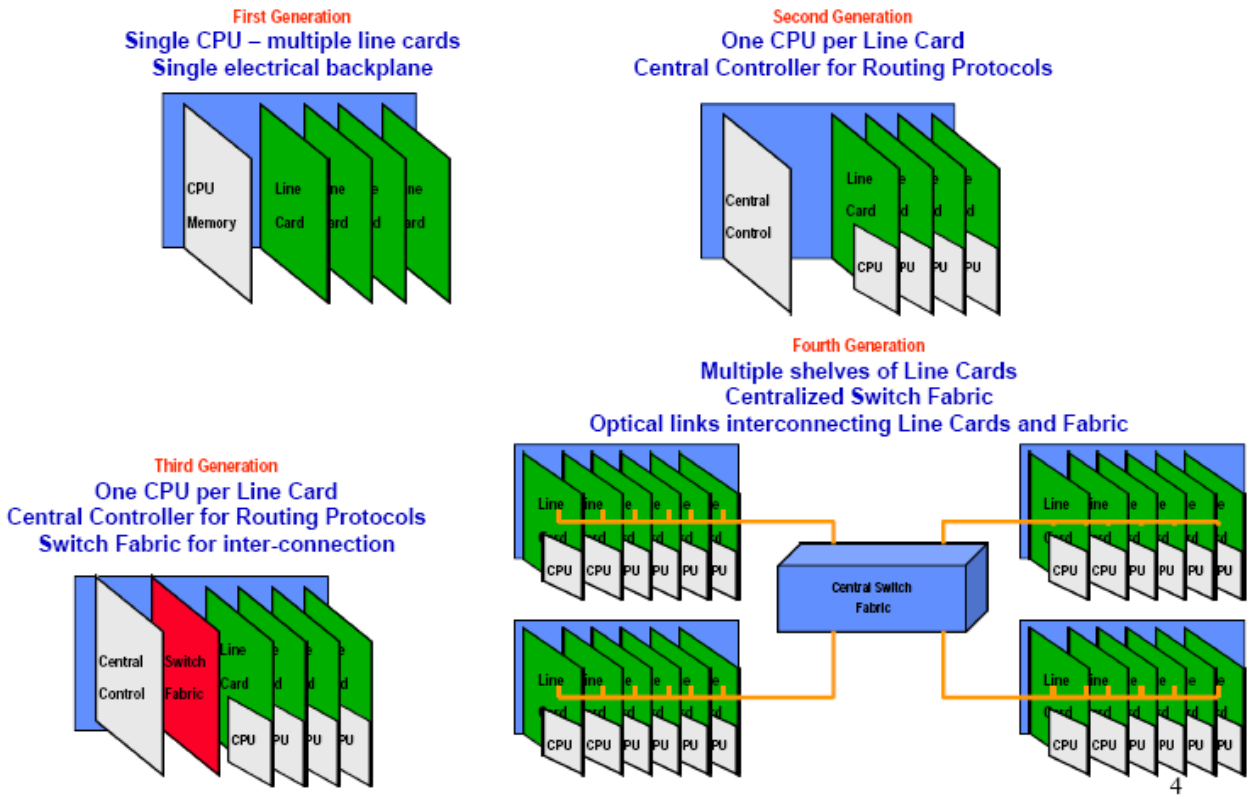

Optical and electronic domains

... in Electronics

- Bitrate-dependent design
- High losses in transmission
- Buffers, processors, logic highly integrated and mature

..in Optics

- Costs are almost independent of distance and bitrate
- Mature enough in high bitrate transmission
- Conceived for long-haul
- Component integration in its first steps

Interconnection architecture

- Several linecards with electronic I/O and logic
- All transmissions synchronized within the fabric
- Fabric performs forwarding (Broadcast/select)
- Uses WDM to select destination linecard

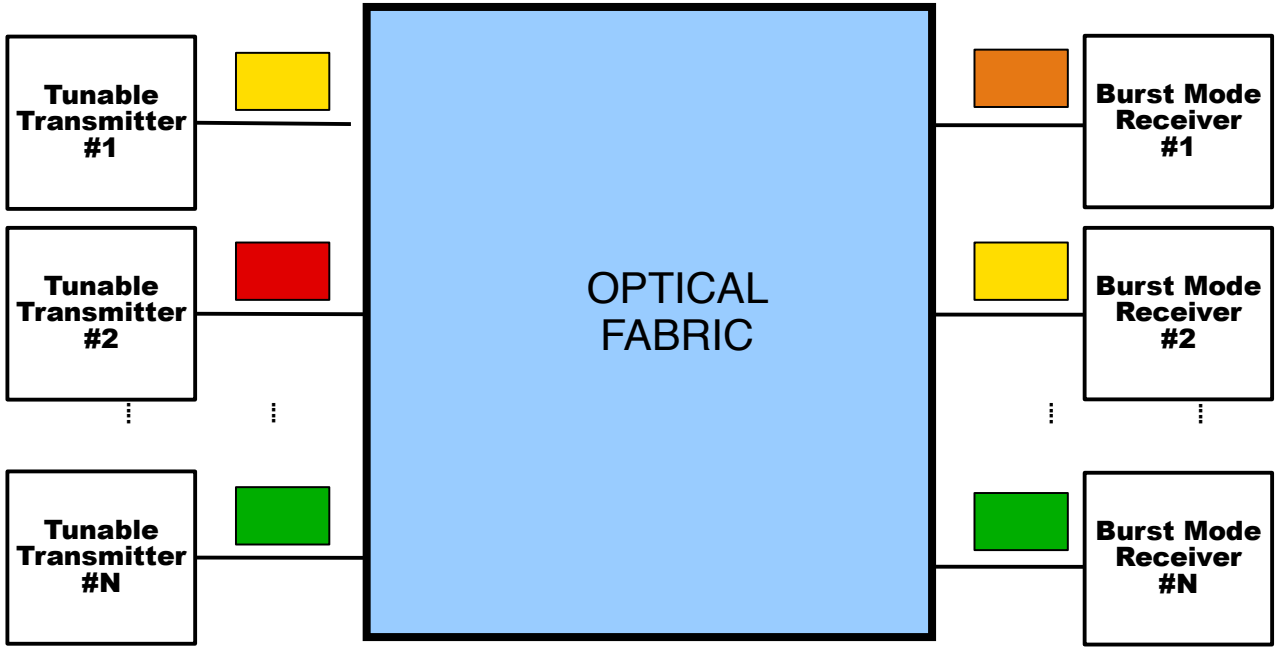

Our contribution

- Scalability of capacity and costs for different optical interconnection architectures
- Accurate physical-layer modeling of optical signal impairments based on data sheets of commercial components

Main limitations of single-plane

- Around 1 Tb/s of maximum capacity
- Signal power at the receiver (penalties grow with port count)
  - Scalability (Maximum achieved bitrate was low)
- Transmitter tunability (very complex transmitters having to tune on a broad spectrum)

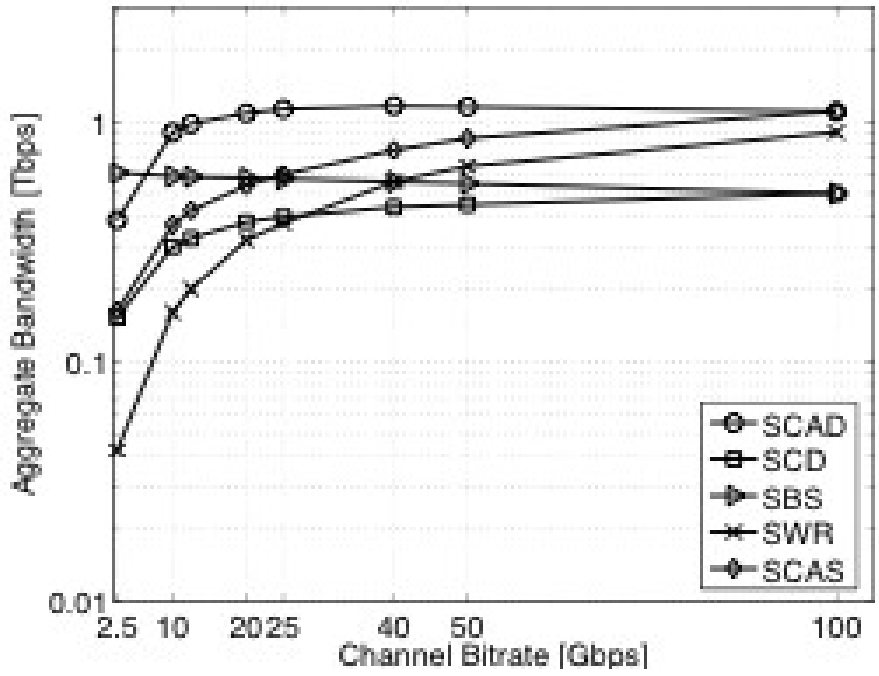

Multiplane architectures

- Transmitters can select up to S output switching planes
- They select output linecard by tuning on N/S channels (mitigates tunability problems)

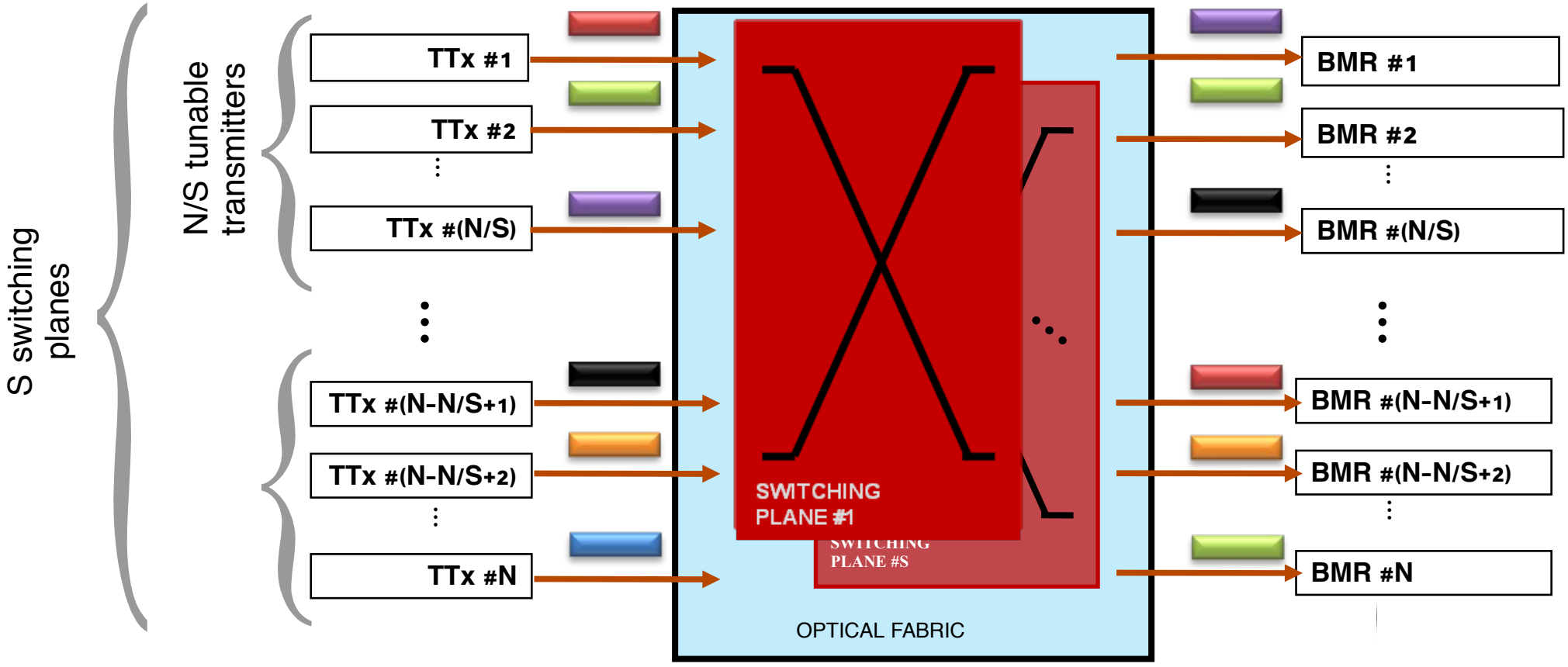

Architectures considered

- 3 architectures have been considered
  - **A final amplification stage in common for all**
  - **They have a different distribution stage based on different principles:**
    - **Multiplane Couple and Amplify (Broadcast and select)**
    - **Wavelength Selective "V" architecture (SOA gates)**
    - **Wavelength routing space (AWG routing)**

Wavelength Select "V" (WSV)

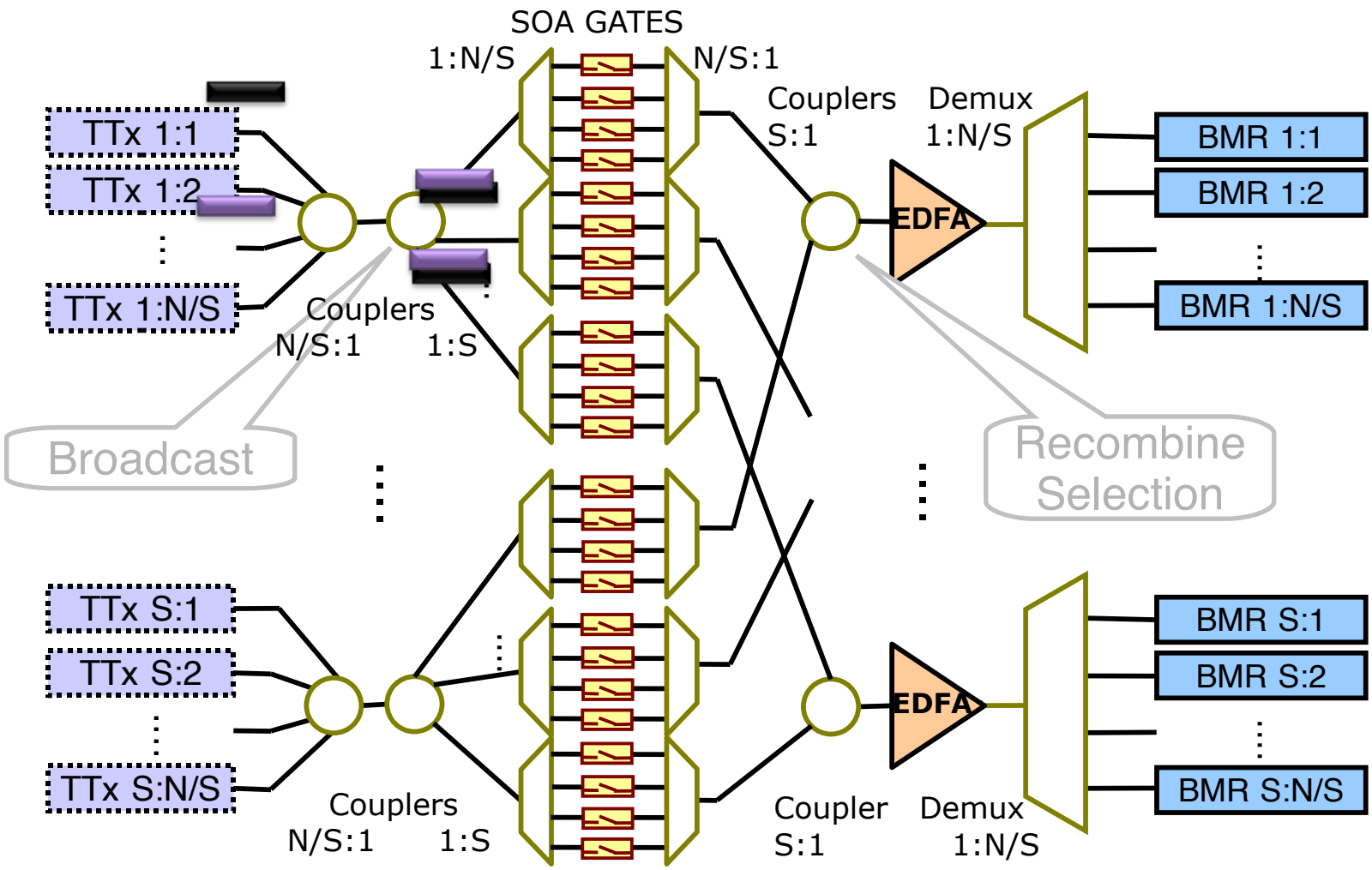

Multiplane Couple-Amplify-Demultiplex (MCAD)

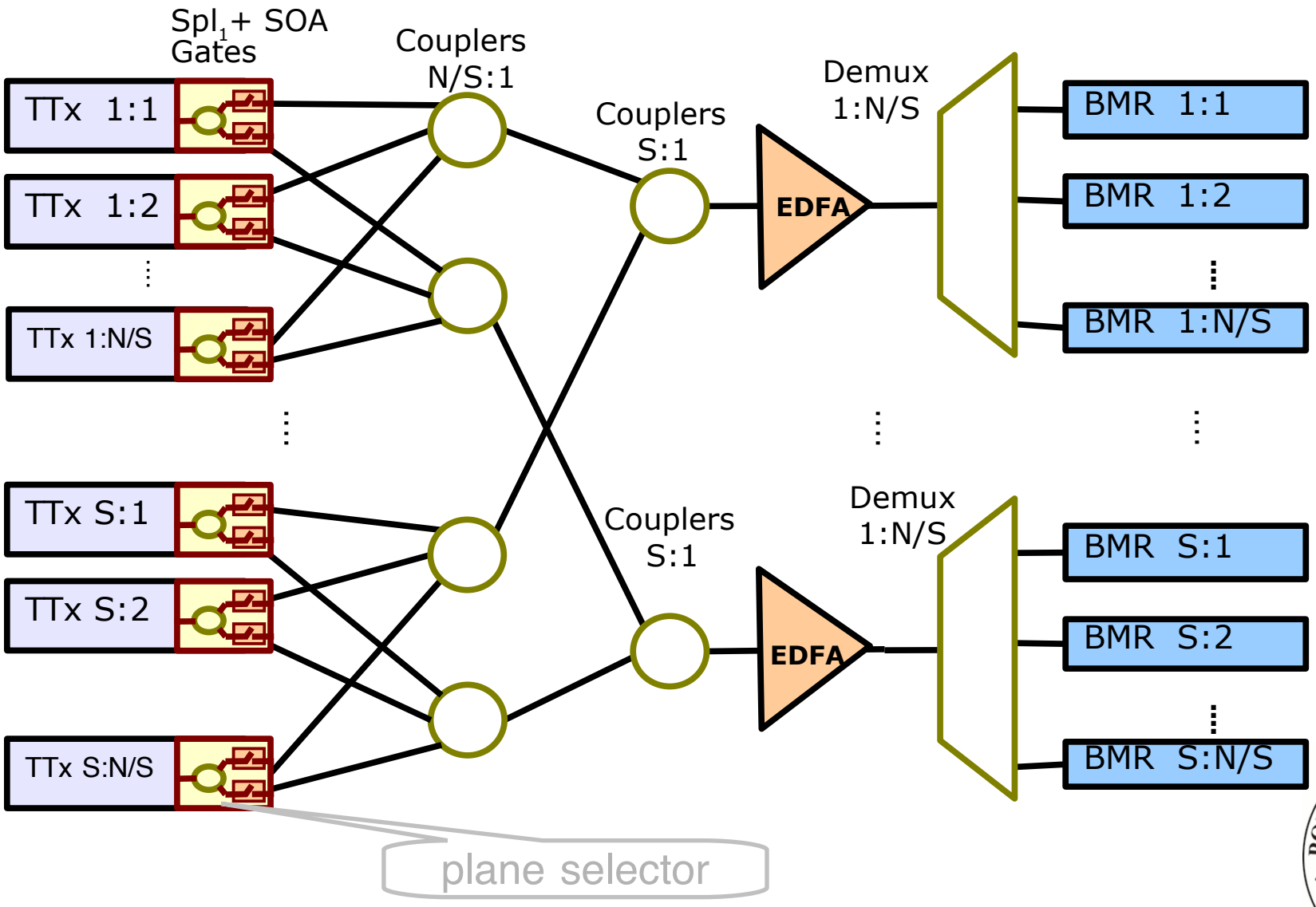

Wavelength Routing Space (WRS)

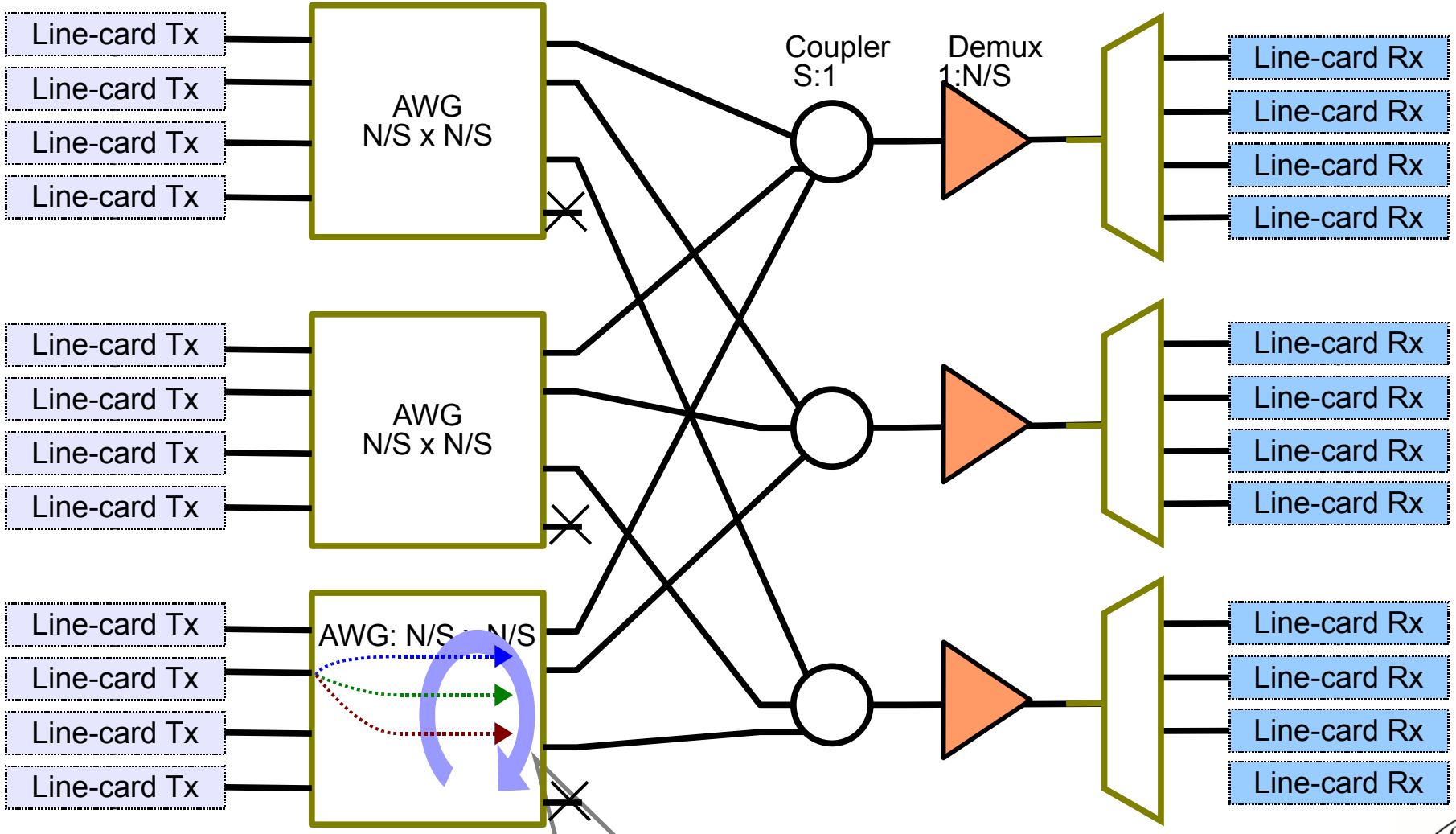

Cyclic property → No coherent crosstalk → TTx tunability equal to N

Performance

- Aggregate bitrate limited by:
  - Power
    - Port count penalties on passive components (IL, PDL, U)
    - Extinction Ratio on switches (35 dB, causing crosstalk) dependent from the number of switching planes
    - Bitrate dependent sensitivity (13,5 dB/ Decade of bitrate)
  - Noise
    - Target of 17 dB OSNR
    - Accumulation in spectrum since lasers behave noise sources
    - Nominal noise in transmitters ranging from 40 (realistic) to 80 dB (ideal) below nominal signal
- Obtained maximum capacity combinations of number of ports (N) number of planes (S) and bitrate of linecards

Performance (2)

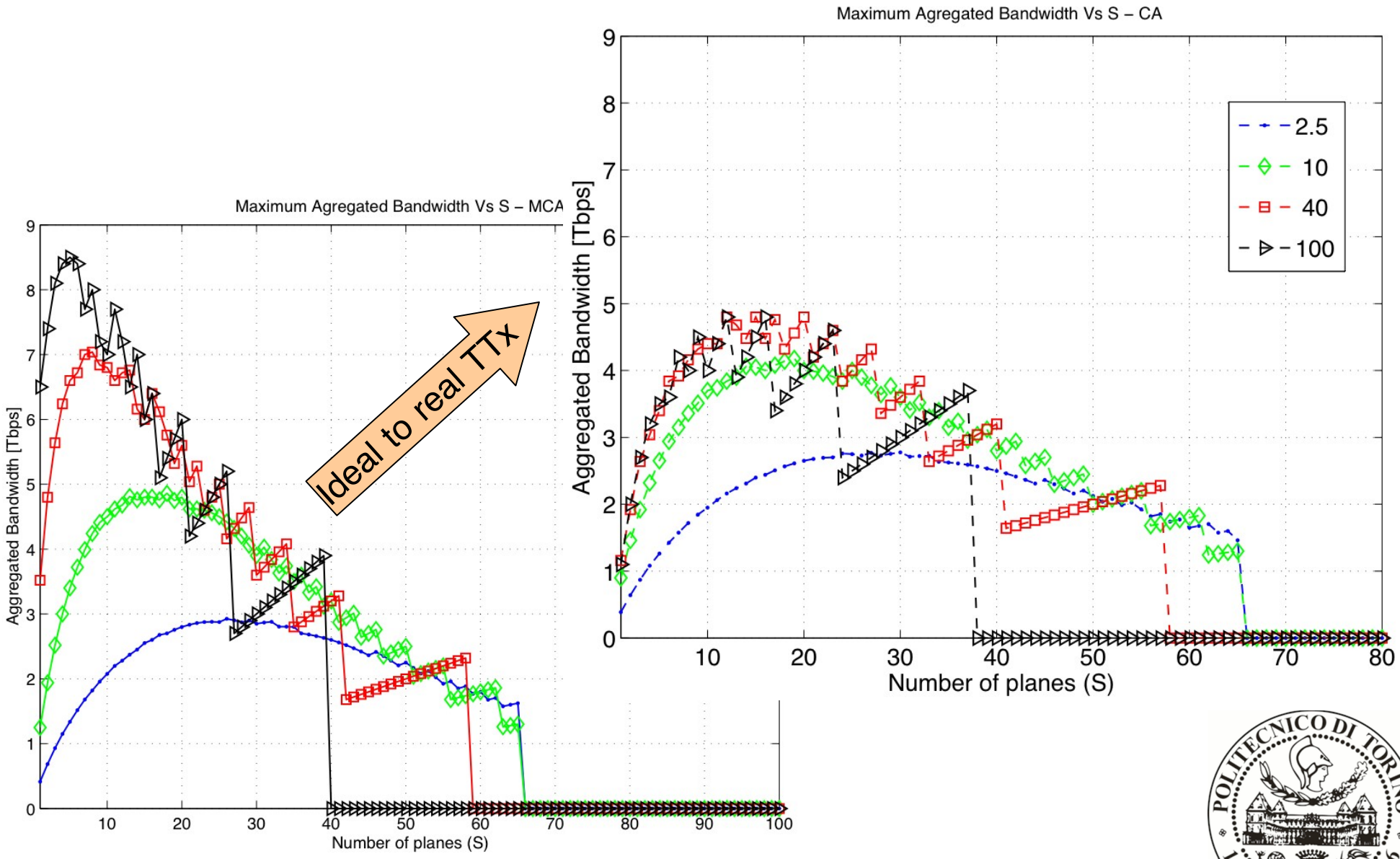

Performance (3)

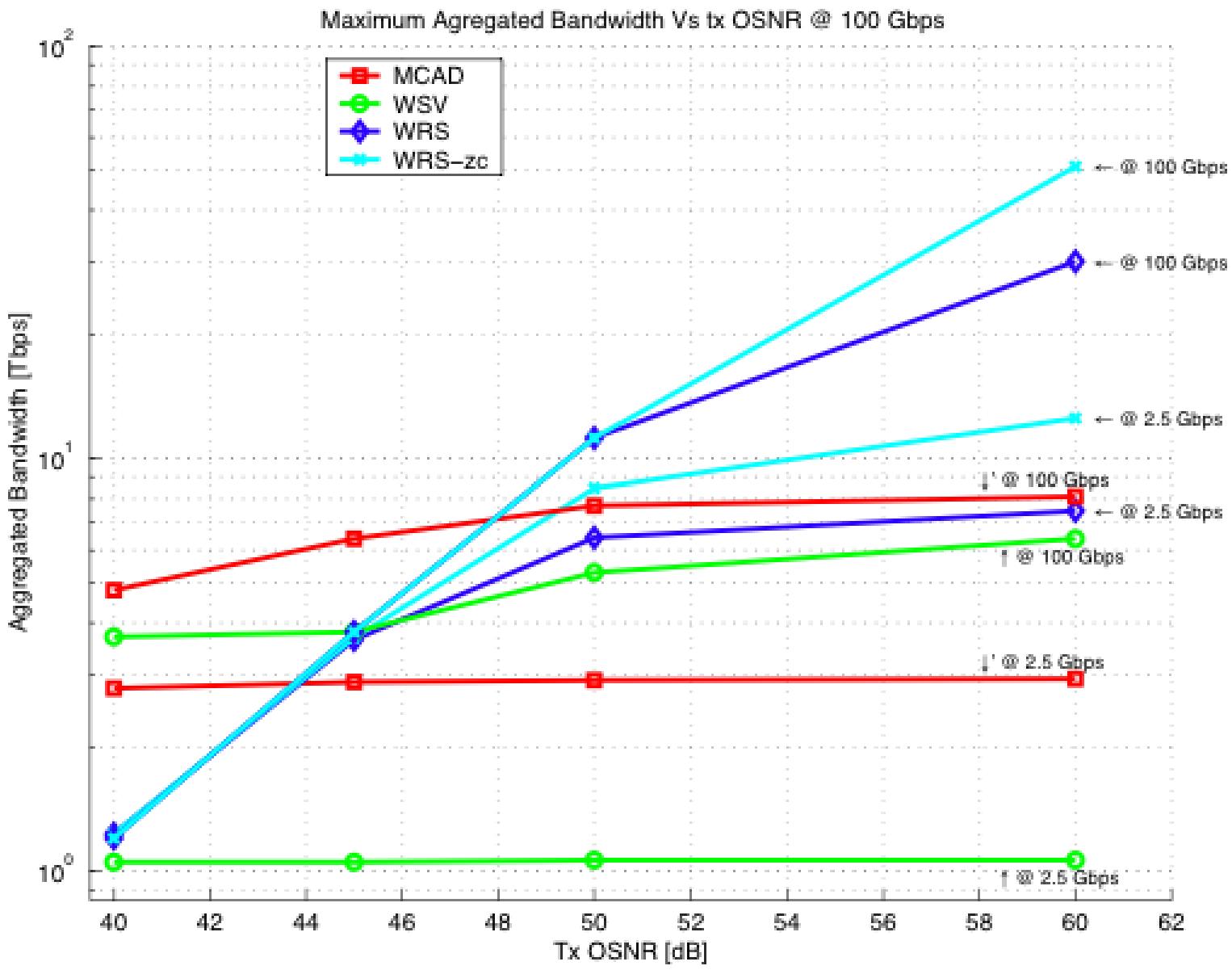

How much do they scale..?

Receiver sensitivity constraints

$$P_{ch,out}^{EDFA}|_{dBm} - L_{Dem}(N/S)|_{dB} - \mu \geq P_S|_{dBm}$$

Power per channel after the amplification stage

Demux losses

3 dB margin (aging, non ideal components, other BMR penalties)

BMR Sensitivity

OSNR constraints

Minimum signal no noise Ratio to guarantee BER

Noise accumulates differently on all architectures

$$P_{ch,out}^{EDFA}|_{dBm} - P_{N,out}^{EDFA}|_{dBm} - \mu \geq T_{OSNR}|_{dB}$$

Noise power after the amplification stage

BMR OSNR

Switching high bandwidth costs…

- Dependence on number of ports in passive components
- For wavelength routing components (AWG,demuxes) the number of FSR to be supported increases
- Transmitter costs increase with bitrate (we assumed linearly)
- TTX can tune to a limited number of channels
- Amplifiers have a limited bandwidth
- SOAs as gates have complexity/cost similar to a laser

Switching high bandwidth costs (2)

SOAs as gates bring a large contribution to final costs

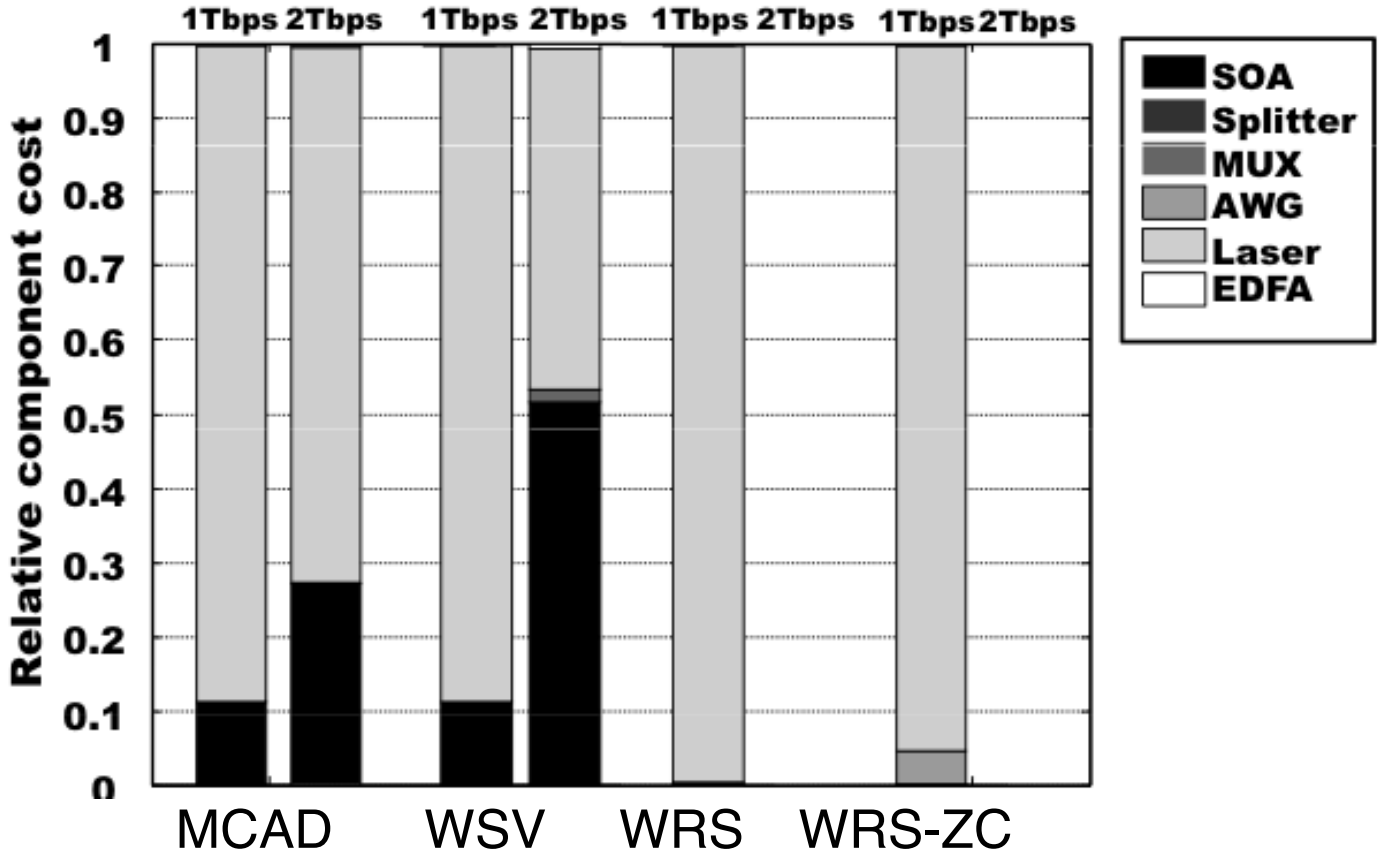

Relative costs

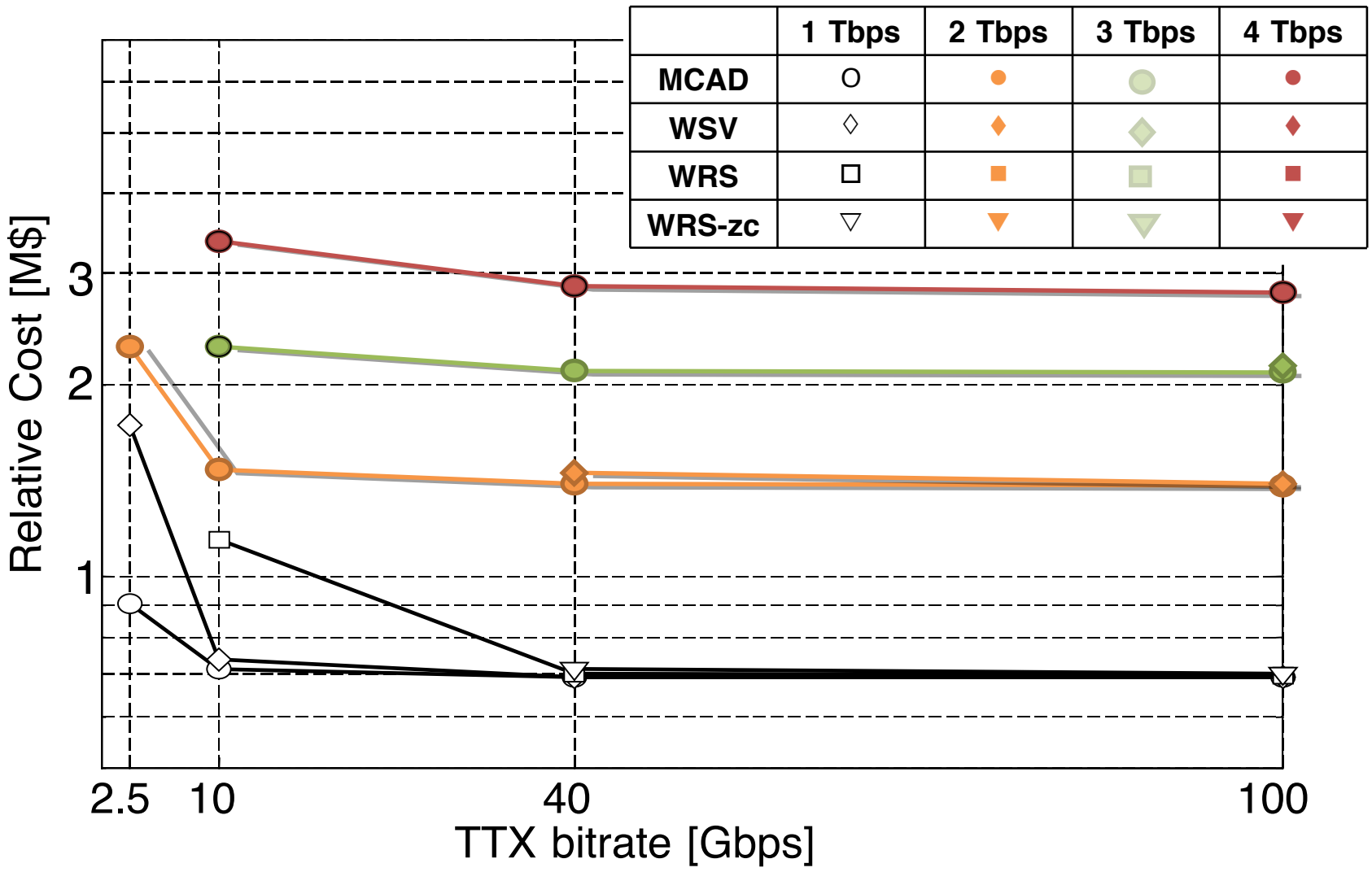

Estimations based on current component cost with no integration nor economy of scale advantages

Conclusion

- Physical impairments limit maximum aggregate bandwidth in optical fabrics for terabit packet switches
- Multiplane solutions mitigate some impairments and transmitter complexity
- Few Tb/s are possible with current commercial components
- But costs suggest always to use simpler (passive) components, because active components cost high -> high bitrates are convenient rather than too many ports

Thank you for your attention!

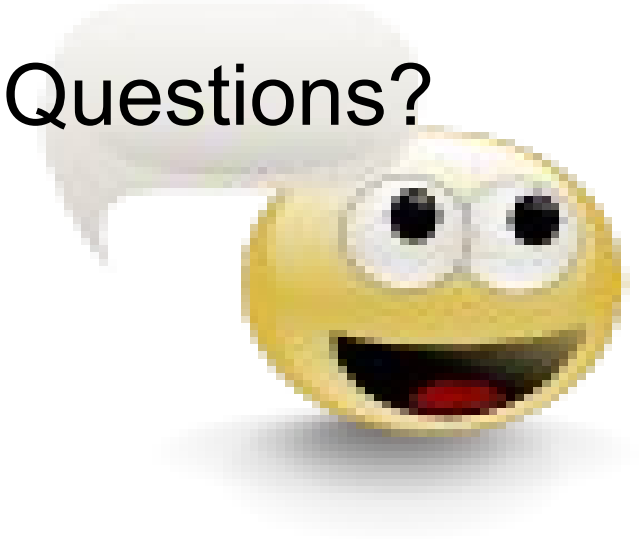

TTx Noise model

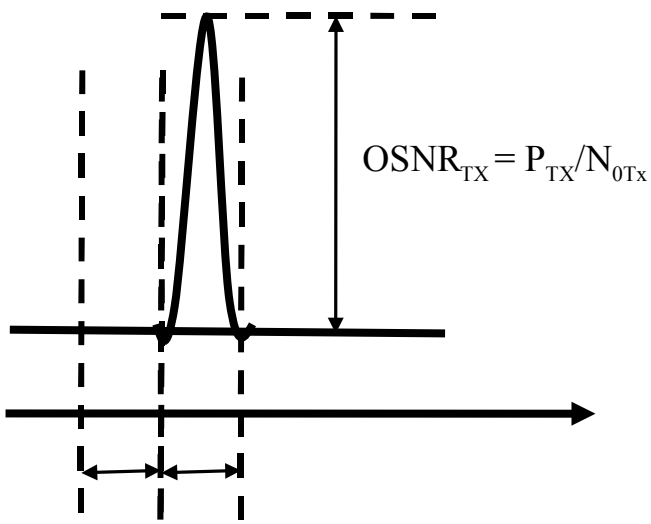

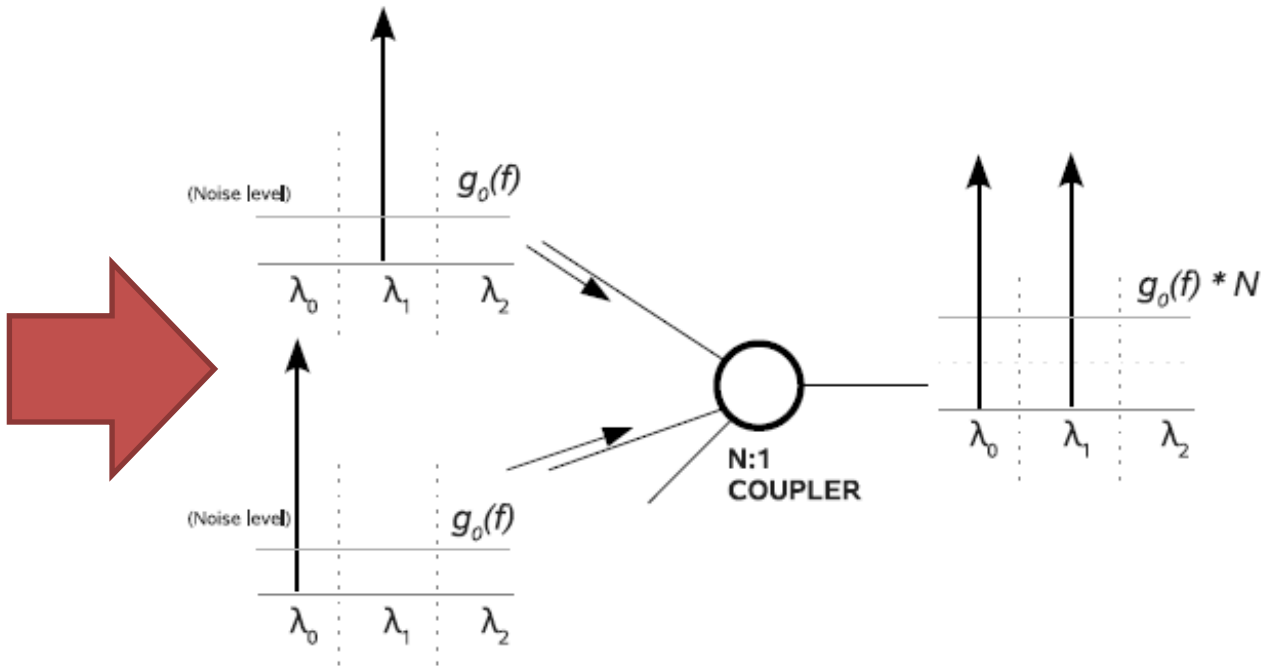

Crosstalk

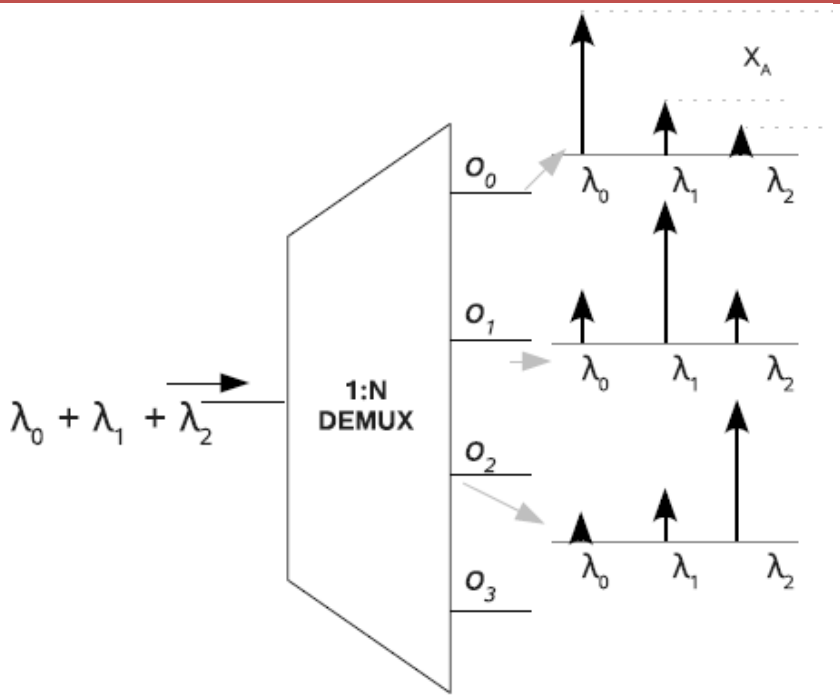
$\lambda_0 + \lambda_1 + \lambda_2$
1:N
DEMUX
o_0
o_1
o_2
o_3
X_A
λ_0 λ_1 λ_2

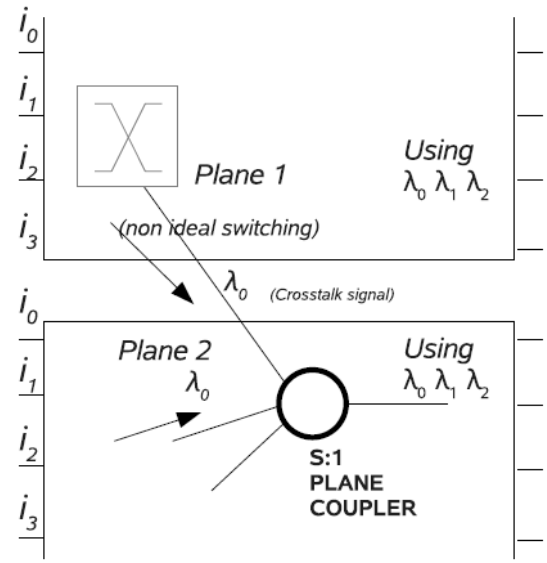
i_0
i_1
i_2
i_3
Plane 1
Using
λ_0 λ_1 λ_2
(non ideal switching)
λ_0 (Crosstalk signal)
Plane 2
λ_0
S:1
PLANE
COUPLER

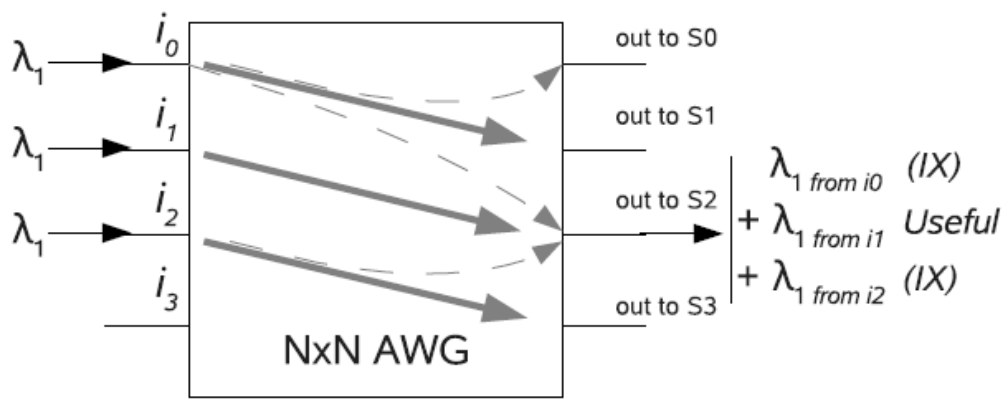
λ_1
i_0
i_1
i_2
i_3
NxN AWG
out to S0
out to S1
out to S2
out to S3
$\lambda_{1\ from\ i0}$ (IX)
+ $\lambda_{1\ from\ i1}$ Useful
+ $\lambda_{1\ from\ i2}$ (IX)