STAN TOOL

Stability Analysis of Microwave Circuits

S. Dellier, PhD

AMCAD Engineering
Advanced Modeling for Computer-Aided Design

AGENDA

- Introduction
- Existing methods
- STAN tool and application examples
- Q&A

INTRODUCTION

- Stability analysis is a critical step of RF design flow
- Classical methods are either not complete or too complex…
- Stability analysis need to be efficient (especially in large signal)

- Rigorous
- Fast
- User-friendly
- Compatible with commercial CAD softwares

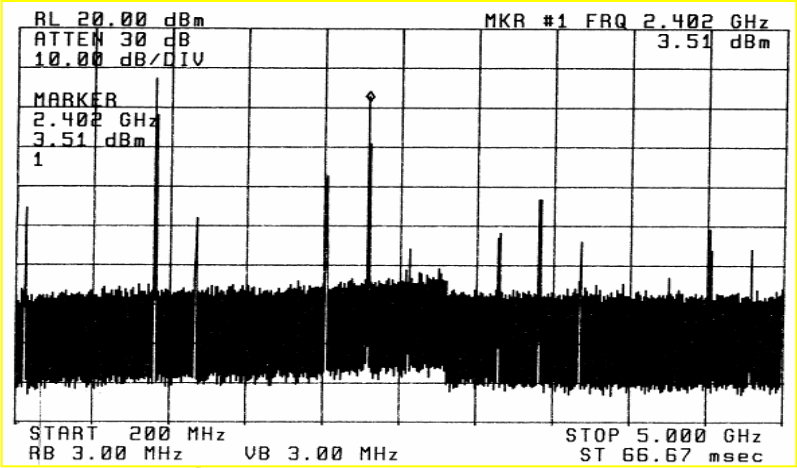

EXISTING METHODS

Linear analysis “small signal”

- K factor
- Normalized Determinant Function (NDF)
- Stability envelope
- Pole-zero identification

- Non-linear analysis “large signal”
  - Nyquist criterion
  - NDF
  - Bolcato, Di Paolo & Leuzzi, Mochizuki, …
  - Pole-zero identification

EXISTING METHODS

Linear analysis

- Widely used: K factor (also μ and μ' now)
  - K>1 & |Δ| <1: unconditional stability of two port network
  - K<1: conditional stability → stability circles

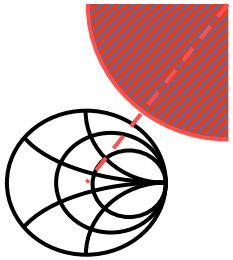

Unconditional stability

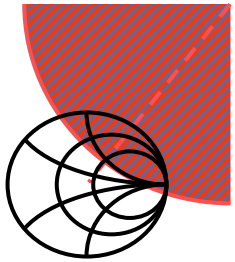

Conditional stability

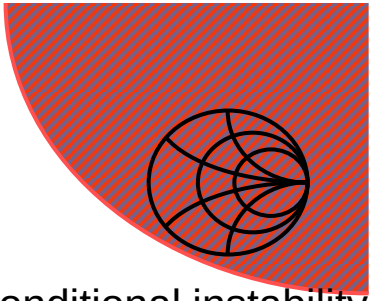

Unconditional instability

Limitations:

Only indicates that a stable circuit will continue to be stable when loading it with passive external loads at the input or output

Do not guarantee the internal stability of the circuit !

EXISTING METHODS

Linear analysis

- Potentially instable architectures for which K factor is not enough

Multi-stage power amplifier

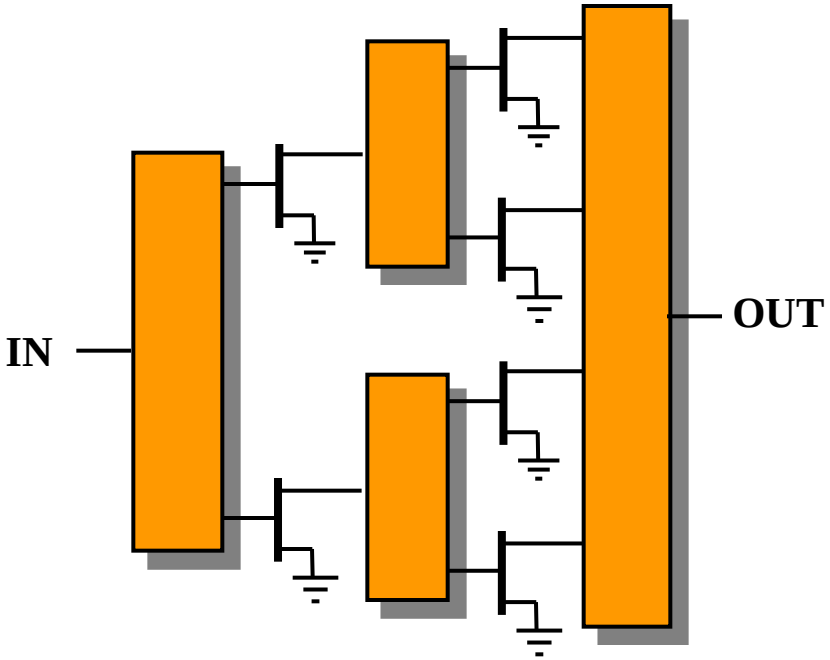

Multi-fingers transistor

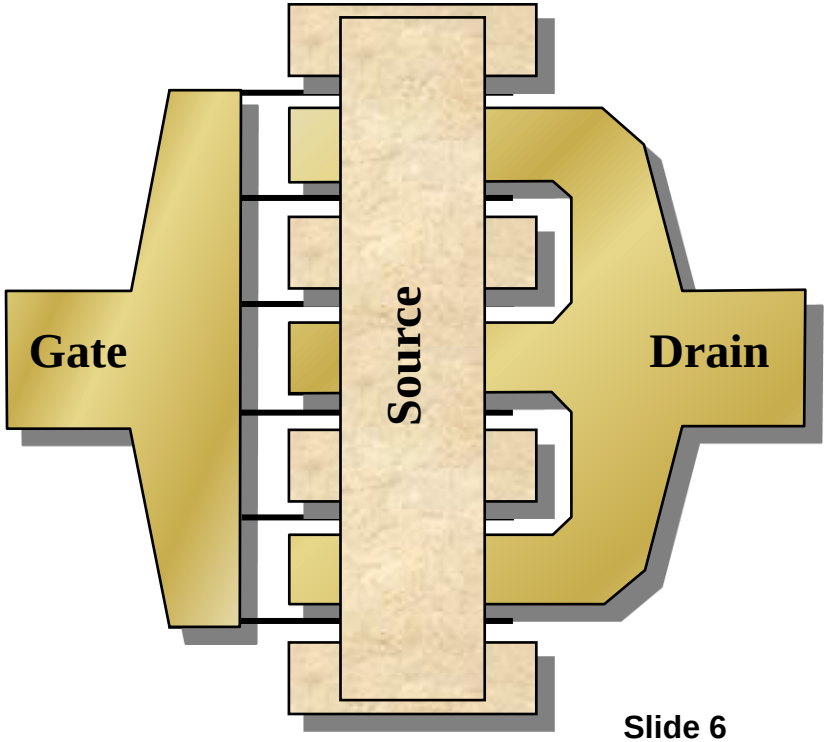

EXISTING METHODS

Pole-Zero Identification Principle

$$H(j\omega)$$

Frequency domain Identification techniques

$$\hat{H}(s) = \frac{\prod_{i=1}^{n}(s - z_i)}{\prod_{j=1}^{p}(s - \lambda_j)}$$

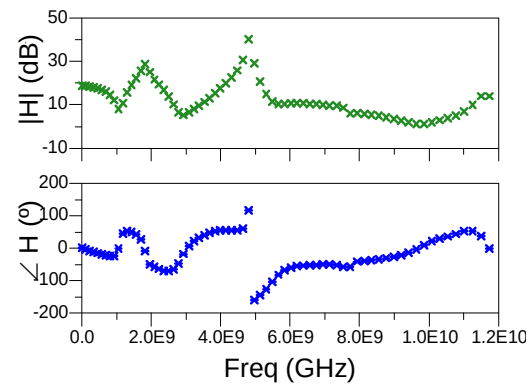

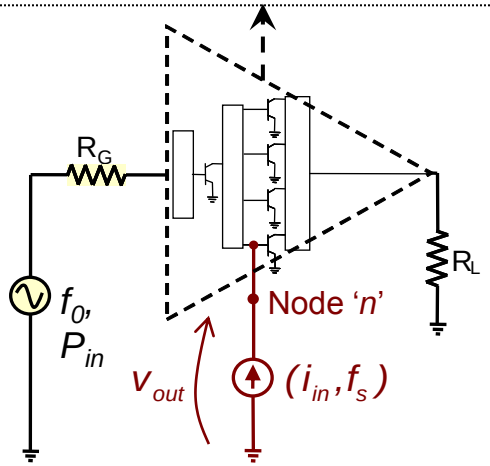

Pole-zero plot

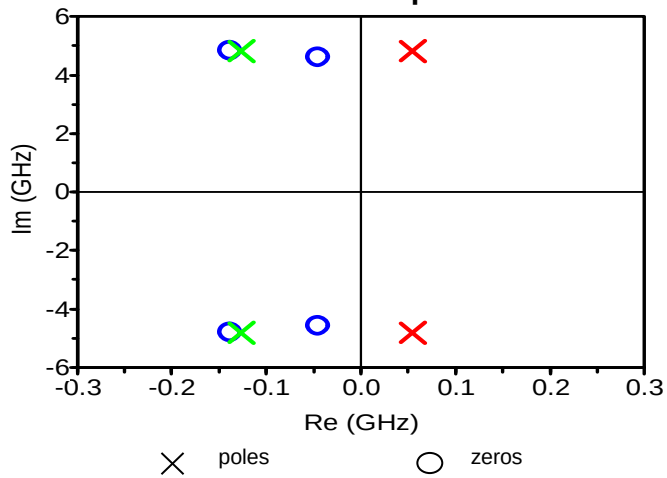

Complex conjugate poles with positive real part -> start-up of an oscillation

Oscillation frequency = Module of the imaginary part

STAN TOOL

STAN TOOL

eman ta zabal zazu

Universidad del País Vasco
Euskal Herriko Unibertsitatea

cnes
CENTRE NATIONAL D'ÉTUDES SPATIALES

- J.M. Collantes *et al*. "Monte-Carlo Stability Analysis of Microwave Amplifiers", *12th IEEE Wireless and Microwave Technology Conference*, April 2011, Florida.
- A. Anakabe et al. "Automatic Pole-Zero Identification for Multivariable Large-Signal Stability Analysis of RF and Microwave Circuits", *European Microwave Conference*, September 2010, Paris.
- J.M. Collantes et al. "Expanding the Capabilities of Pole-Zero Identification Techniques for Stability Analysis", *IEEE Microwave Theory and Techniques International Symposium,* June 2009, Boston.

STAN TOOL

Key Elements

- Suitable for both linear and non-linear stability analysis
- Very easy to use with any CAD tool
- Very easy to analyze results
- Relative stability information delivered
- Oscillation mode knowledge -> Help to find the suitable stabilization strategy
- Parametric Analysis implemented
- Monte-Carlo Analysis

STAN TOOL

Integration in CAD Environment

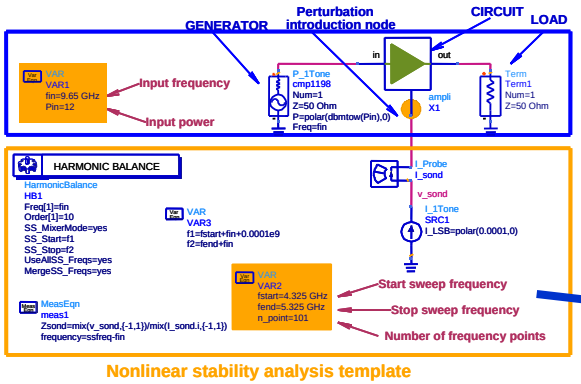

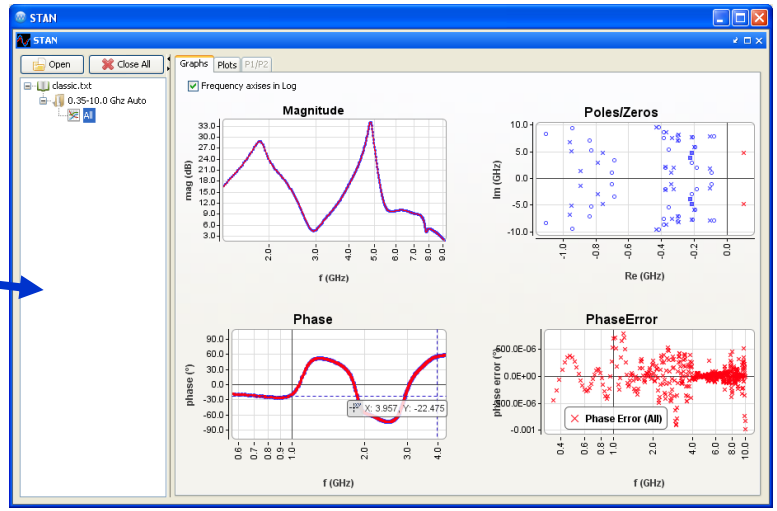

EDA Tool

Templates for ADS, MWO…

AC simulation for linear

HB simulation for non-linear

STAN tool

integrated in IVCAD software

User-friendly GUIs

STAN TOOL

Automatic mode

- The order of $\hat{H}(s)$ is a priori unknown

$$\hat{H}(s) = \frac{\prod_{i=1}^{n}(s - z_i)}{\prod_{j=1}^{p}(s - \lambda_j)}$$

- Automatic algorithm for pole-zero identification in the context of stability analysis is integrated in STAN tool

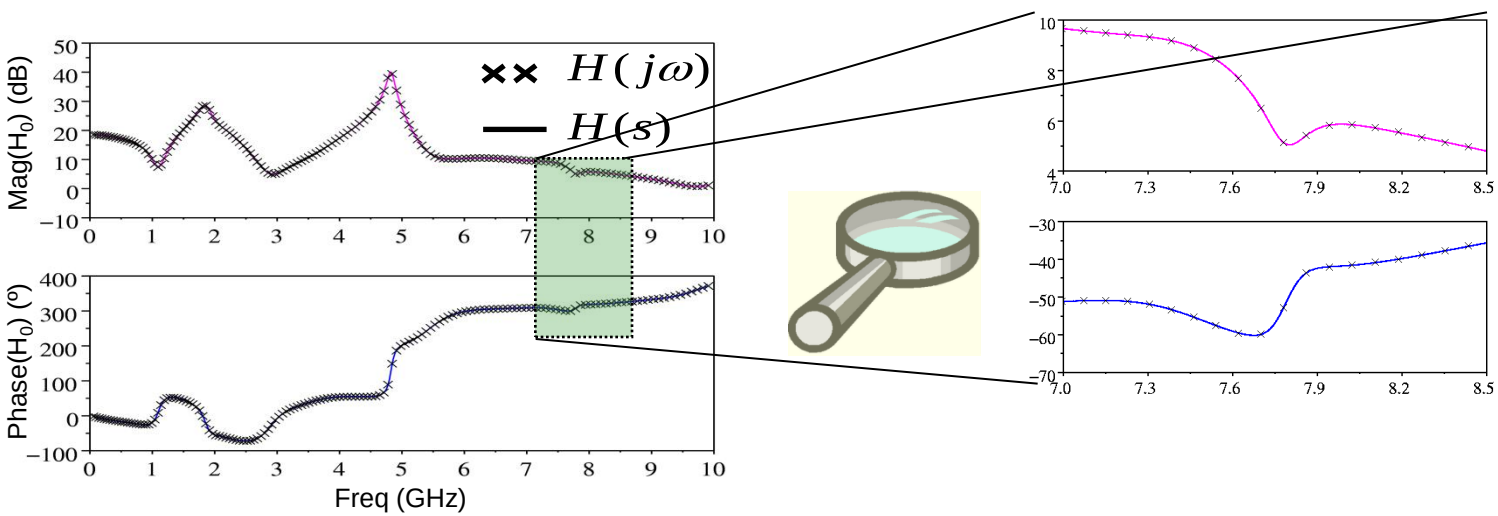

- This routine eases the use of pole-zero identification for multivariable stability analysis

STAN TOOL

Multi-nodes

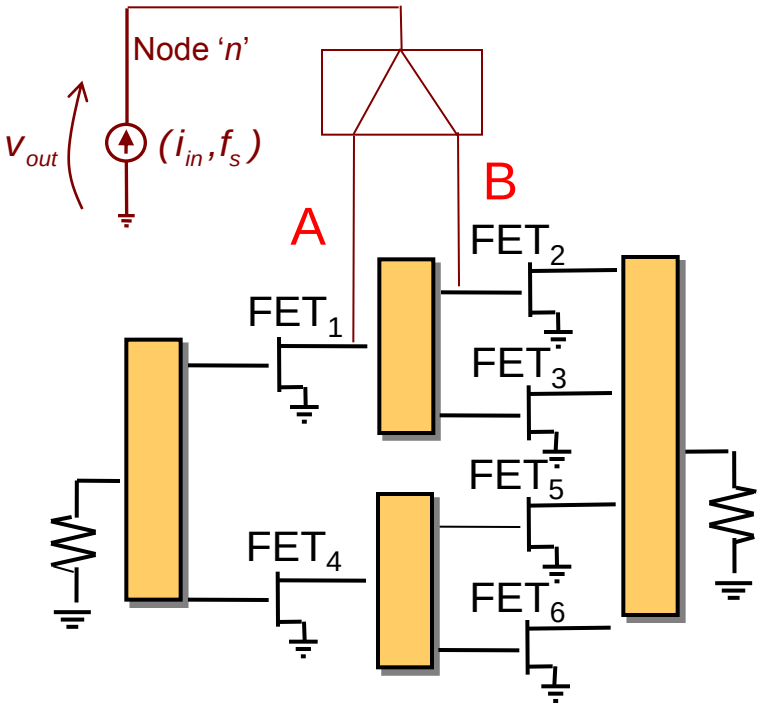

A- No oscillation detected in the common node

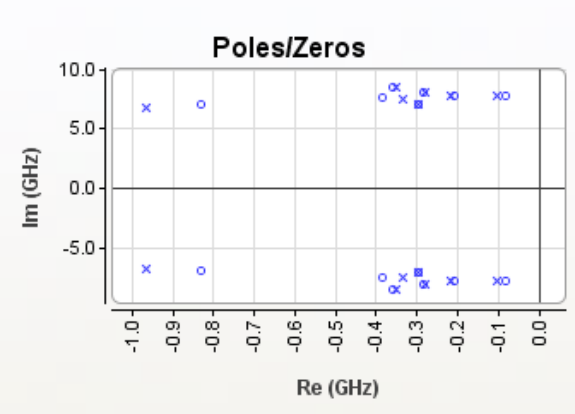

B- Oscillation detected in the transistor node

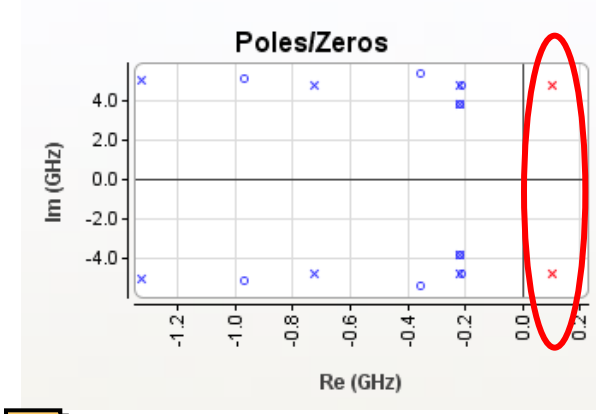

⇒ Odd mode (parametric frequency division)

⇒ will determine the stabilization strategy

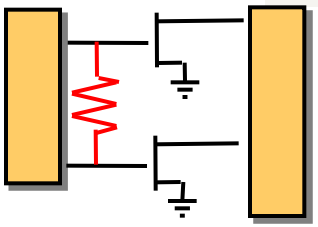

STAN TOOL

Multi-parameters

- Analysis with swept parameter(s)
- Verification for various conditions (Pin, Zload, …)
- Optimization of stabilization networks

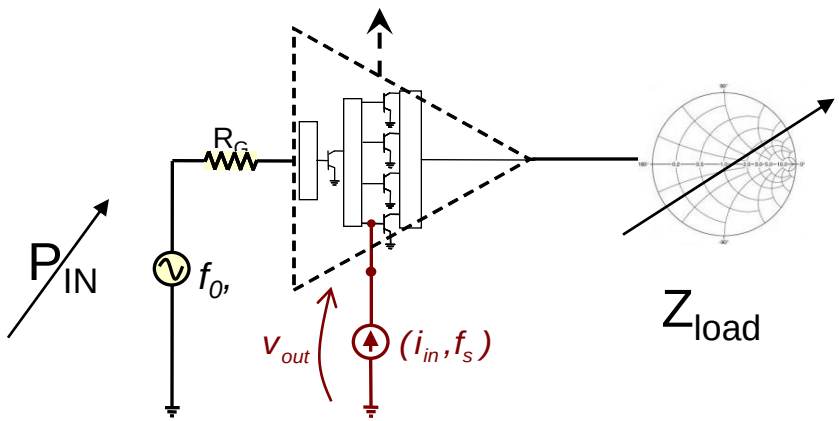

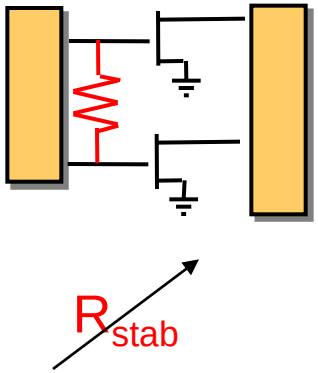

STAN TOOL

Multi-parameters

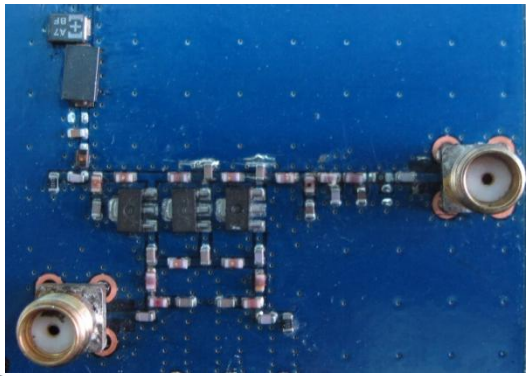

Example: 3-stage LDMOS DPA for SDR applications

- Application requires absence of spurious for a wide range of operating conditions

- Multivariable large-signal stability analysis versus input frequency, input power and real and imaginary parts of load termination Z_L.

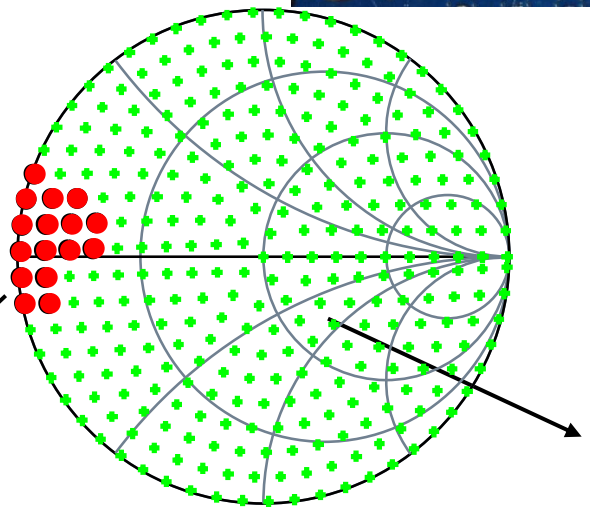

Frequency division ($f_{in}/2$) detected

Stable and unstable regions in the Γ_L plane for fin=500 MHz and Pin=17.1 dBm

A. Anakabe *et al*. "Automatic Pole-Zero Identification for Multivariable Large-Signal Stability Analysis of RF and Microwave Circuits", *2010 European Microwaev Conference*, Paris, September 2010.

STAN TOOL

Monte-Carlo

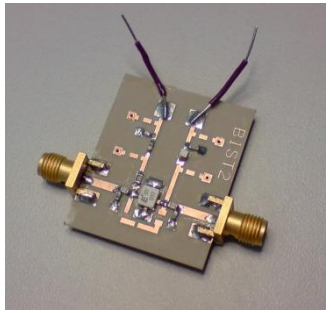

Example: L-Band medium power FET amplifier

- Low frequency instability related to the input bias network
- Stabilization by the inclusion of a gate-bias resistor R_{STAB}
- Monte Carlo sensitivity analysis for different R_{STAB} (5 % dispersion in all circuit parameters)

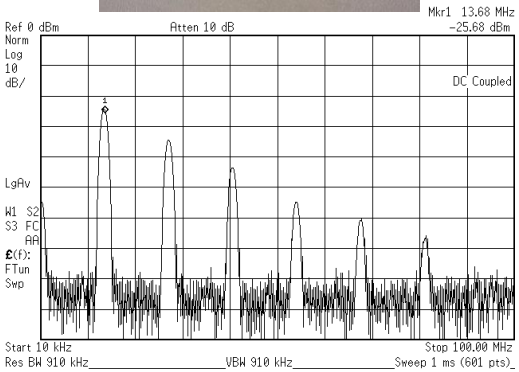

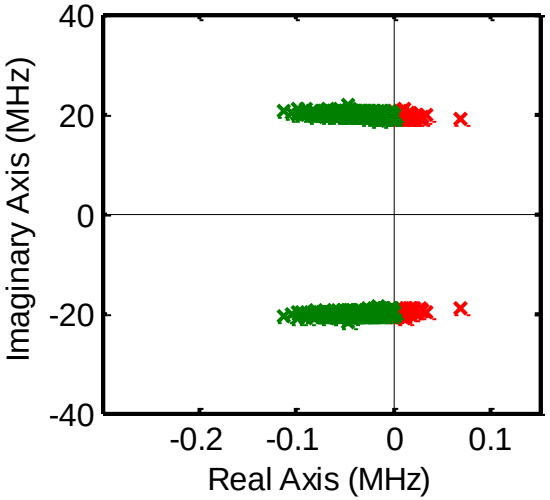

✗ $R_{STAB} = 44\ \Omega$

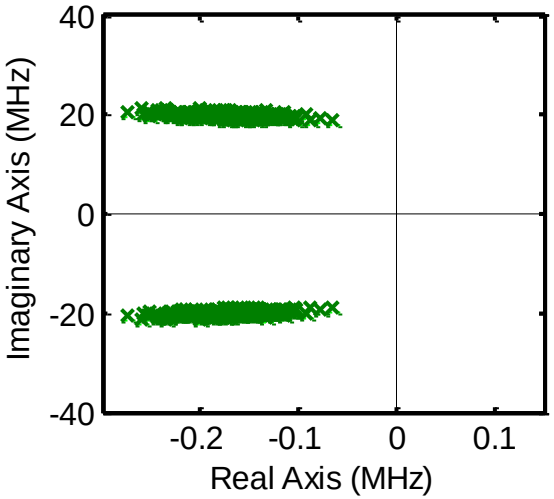

✓ $R_{STAB} = 70\ \Omega$

Q & A

STAN TOOL

Contact

Stéphane Dellier

E-mail: dellier@amcad-engineering.com

Phone: +33 555 040 531

www.amcad-engineering.com