Authentication by Palmprint Recognition using Phase-Difference Trained by Probability Neural Network

S.G. Siddharth*, M. Arunkumar** & S. Valarmathi***

*P.G. Scholar, Department of Electronics & Communication Engineering, Bannari Amman Institute of Technology, Sathyamanglam, Tamilnadu, INDIA. E-Mail: siddharth.bannari{at}gmail{dot}com
**Assistant Professor, Department of Electronics & Communication Engineering, Bannari Amman Institute of Technology, Sathyamanglam, Tamilnadu, INDIA. E-Mail: mak5phd{at}gmail{dot}com
***Head of the Department, Electronics & Communication Engineering, Bannari Amman Institute of Technology, Sathyamanglam, Tamilnadu, INDIA.

***Abstract*—**In this paper we are using phase difference method for the purpose of extracting the features and for training and testing the extracted features Probability Neural Networks is used the extracted features are treated with PCA. Among the various methods available methods, PNN stands apart from the set because it improves the effective level of security by just increasing the number of hidden layers instead of changing the parameters, as in other systems. The basic reason why we use phase difference is that for obtaining high precision and efficiency (i.e.) we have two parts in phase difference namely the real and imaginary part, to reduce the system execution time we have chosen only the real part and processed with it. We have various techniques but we have chosen PCA method as a dimensionality reduction technique since it takes only the ROI that we have defined before into account. This project aims to provide an effective authentication system. The combination of PNN with phase difference for sure will be a cost effective, highly secure and a robust setup. The setup proves to be immune to illumination and other factors that happens to hinder performance during capture of the input image (palm-print).

***Keywords*—**Authentication; Features; Learning Rate; Palm-Print; Phase Difference; Recognition Rate.

***Abbreviations*—**Back Propagation Neural Network (BPN); Principle Component Analysis (PCA); Probability Neural Network (PNN); Region of Interest (ROI).

I. INTRODUCTION

BIOMETRIC system is essentially a pattern recognition system which makes a personal identification by determining the authenticity of a specific physiological or behavioral characteristic possessed by the user. Biometrics has gained much attention in the security world recently. Many different types of personal identification systems have been developed and palm print verification is one of the emerging technologies because of its stable, unique characteristics, low-price capture device, fast execution speed also it provides a large area for feature extraction. Palm print recognizes a person based on the principal lines, wrinkles and ridges on the surface of the palm. The recognition process consists of image acquisition, pre-processing, feature extraction, matching and result. There are many different techniques available for pre-processing, feature extraction, classifiers [Badrinath & Phalguni Gupta, 2012; Bob Zhang et al., 2013]. Palm print matching is an approach for verifying a palm print input by matching the input to the claimed identity template stored in a database. If the dissimilarity measure between the input and the claimed template is below the predefined threshold value, the palm print input is verified possessing same identity as the claimed identity template. Our palm print matching system contains three modules, preprocessing and ROI Extraction, Feature extraction, Energy calculation, Voting Classification and matching.

The main steps of palm print matching system are described below:

1. *Preprocessing*: The color image is converted into gray scale and feature extraction is made at the central part of the palm print.
2. *Feature Extraction*: We apply a contour let transform to extract feature information from the central part.
3. *Energy Calculation*: Phase difference is applied to extract the high dimensional features, which is enormously present in the palm print. Energy features are calculated as a feature selection step and feature vectors are created.

 © 2014 | Published by The Standard International Journals (The SIJ)

4. *PNN*: An efficient method to test and train the inputs, validate the palm inputs for effective authentication is done.

II. LITERATURE SURVEY

Badrinath & Phalguni Gupta (2012) proposed that the reconstruction error using principal component analysis, the feature are extracted by phase difference method and hamming distance is used to find the matching score.

Bob Zhang et al., (2013) proposed that 3D Palm print has proved to be a significant biometrics for personnel authentication. Special methods adapted are coarse level matching and ranking support vector machine.

Priyanka Somvanshi & Milind Rane (2012) detailed study about various pattern recognition systems, feature extraction techniques used and the type of features that are available.

Dakshin Rajan Kishu et al., (2012) presented that Intra-model fusion environment to integrate multiple raw palm images at low level. Gabor based feature extraction technique is being used.

Dewi Yanti Liliana & Eries Tri Utaminingsih (2012) suggested the methodology for palm recognition consisted of block-based line detection which dealing with palm print features and recognizing using Dynamic time wrapping.

Ngoc-Son Vu et al., (2012) examined that the use of patterns of oriented edge magnitude by applying a self-similarity based structure on oriented magnitudes and proves that it addresses computational cost, robustness and discriminative power. Results are 20 times better when compared to gabber filter.

Micheal Choras & Rafal Kozik (2011) proposed biometrics for contactless and unrestricted access control for mobile devices. We use knuckles and palm print by fusion.

Lin Zhang et al., (2012) studies image local features induced by the phase congruency model which is supported by psychophysical and neurophysiologic evidences and then the features of palm and knuckle are fused and processed.

Zhenhua Guo et al., (2011) proposed techniques to improve the palmprint image by providing an accurate light source and is angle of placement.

David Zhang et al., (2011) proposed that exclusive extraction of palm print features and palm vein features and to fuse them together to improve the systems efficiency.

Yangqiang Zhang et al., (2011) presented that single sample biometrics recognition being at latest trend are prone to errors so that here the features are fused. The feature extraction technique used is that locality preserving projection based on wavelet transform.

Adams Kong et al., (2009) proposed the overview of current palm print research, describing in particular capture devices, preprocessing, verification algorithms, algorithms especially designed for real time palmprint identification and measures for protecting palmprint systems and users privacy.

Tee Connie et al., (2005) focus made on principal component analysis, fisher discriminates analysis and independent component analysis for authentication.

Iangqian Wu et al., (2004) proposed that novel method for classification of low resolution palmprints. The concern here is the principal lines. Different types of classification based on principal lines are done and the accuracy is assumed to be 96.03%.

Jiwen Lu et al., (2008) studied that recognition method by Locality Preserving Projections and extreme learning machine neural network. Firstly two dimension discrete wavelet transform is applied in the region of interest of each palmprint image for dimensionality reduction, then extreme learning machine is used to classify the images.

Guangming Lu & David Zhang (2003) proposed that using Karhunen-loeve transform is used to get the Eigen palm features.

III. WORK FLOW

3.1. Feature Extraction using Phase-Difference

Phase difference, rather than amplitude information can provide the most significant information of an image. Further it is found to be inherently stable over amplitude and is independent to intensity levels of the image and hence, the measurements are invariant to smooth shading and lighting variations.

One can use phase based features to design an effective and efficient technique for feature extraction. The phase of 1-D-signal x can be obtained using Fourier transform. The Fourier transform X of time varying 1-D signal x of length M is given by,

$$X_j = \sum_{m=0}^{M-1} 1\, X_m\, e^{(-2\pi i/m)jm} \tag{1}$$

where j=0,1,……., M-1.

It can be represented in amplitude and phase form as,

$$X_j = \rho_j^x e^{i\emptyset_j^x} \tag{2}$$

where the magnitude, ρ_j^x and the phase of the signal x, $\emptyset_j^x$ are given by

$$\rho_j^x = \sqrt{Re(X_j)^2 + Im((X_j)^2} \tag{3}$$

$$\emptyset_j^x = (tan^{-1}\left(\frac{Im(X_j)}{Re(X_j)}\right) \tag{4}$$

If the X and Y are the Fourier transforms of 1D signals x and y respectively then the phase difference φ_j is obtained by the difference $\varphi_j^x - \varphi_j^y$.

Phase base techniques have successfully applied for a high accuracy image registration, recognition through iris, finger print, dental, palm print and other computer based applications

It is found that the phase difference obtained from the phase of the signals x and t is also robust to illumination. This can be explained as follows. Suppose the illumination of the two palm print images are different by a constant α, that

means, the change in intensity which corresponds to amplitude can be modeled by scaling the pixel values by α.

Let g be the intensity scaled 1D signal of x. Then g=αx with $\alpha > 0$. The Fourier transform G of g is given by

$$G_j = \sum_{m=0}^{M-1} g_m e^{-2\pi ijm/M} \quad (5)$$

where j=0, 1, …., M-1.

$$G_j = \alpha \rho_j^x e^{i\emptyset_j^x} \quad (6)$$

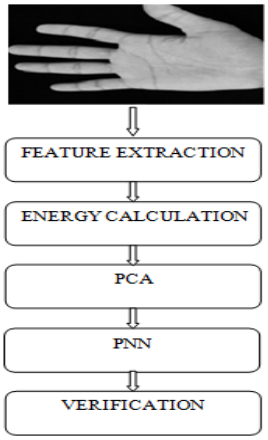

Figure 1: Flow for Palm Print Feature Extraction

From equation (5) it implies that the phase remains unaffected due to illumination.

3.2. *Principle Component Analysis (PCA)*

In simple words PCA could be explained to be an existing system that is used for reducing the number of features to our required levels. Using a large set of values increases the system run time and hence an unwanted delay happens and to avoid it and improve the systems overall efficiency and speed we are using PCA.

IV. Probability Neural Network

A Probabilistic Neural Network (PNN) is predominantly a classifier

- Map any input pattern to a number of classifications
- Can be forced into a more general function approximate

A PNN is an implementation of a statistical algorithm called kernel discriminate analysis in which the operations are organized into a multilayered feed forward network with four layers.

- Input layer
- Pattern layer
- Summation layer
- Output lay

The training process of a PNN is essentially the act of determining the value of the smoothing parameter, sigma

- Training is fast
- Determining Sigma
- Educated guess based on knowledge of the data.

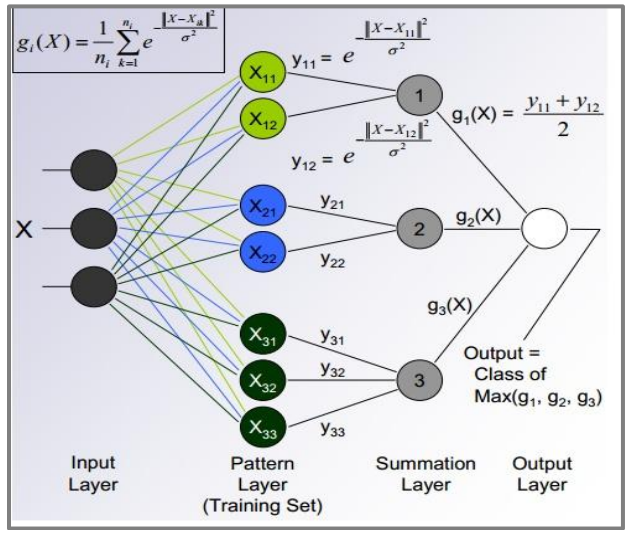

Figure 2: Structure of Probability Neural Network

V. Results and Analysis

Here for our consideration we have taken the inputs from the IIT Palm Print database, to which the phase difference is applied and fed into the BPN. The values tabulated below are for a fixed set of parameters by varying the spread and number of persons

Outputs for varying persons and spread.

Table 1: Outputs with Spread Value=0.010

S. No.	Number of Persons	Elapse Time	CPU Time	Clock
1	2	2.8330	1.965	2.824
2	5	2.5127	2.527	2.511
3	10	2.1967	3.088	2.200
4	15	1.8767	3.650	1.890
5	20	1.5567	4.212	1.593
6	25	1.2359	4.772	1.295

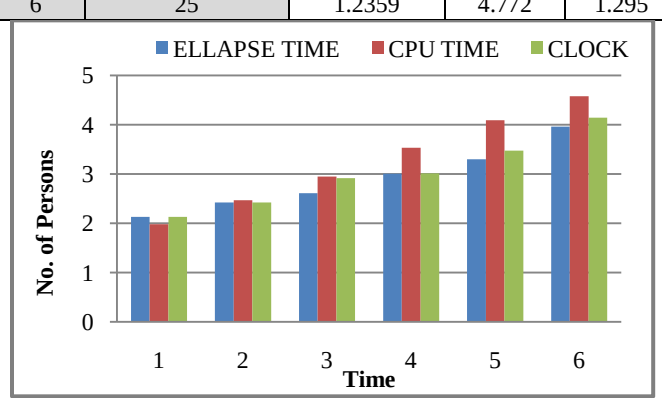

Figure 3: Graph for Spread Value = 0.010

Table 2: Outputs with Spread Value=0.100

S. No.	Number of Persons	Elapse Time	CPU Time	Clock
1	2	2.313	1.934	2.315
2	5	2.591	2.667	2.589
3	10	2.829	3.400	2.713
4	15	3.148	4.134	2.894
5	20	3.426	4.792	3.168
6	25	3.705	5.525	3.442

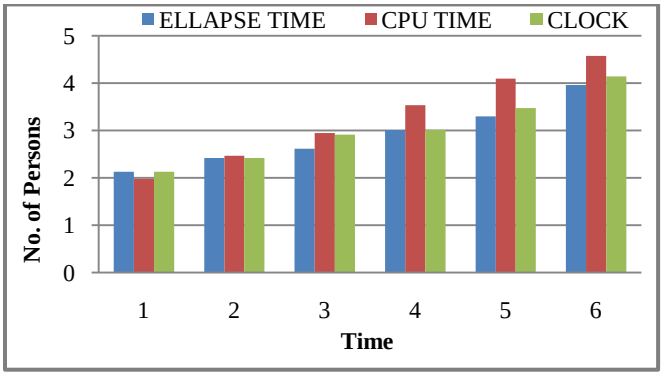

Figure 4: Graph for Spread Value = 0.010

Table 3: Outputs with Spread Value=0.010

S. No.	Number of Persons	Elapse Time	CPU Time	Clock
1	2	2.131	1.981	2.13
2	5	2.422	2.464	2.42
3	10	2.612	2.948	2.91
4	15	3.003	3.531	3.01
5	20	3.300	4.091	3.47
6	25	3.956	4.575	4.14

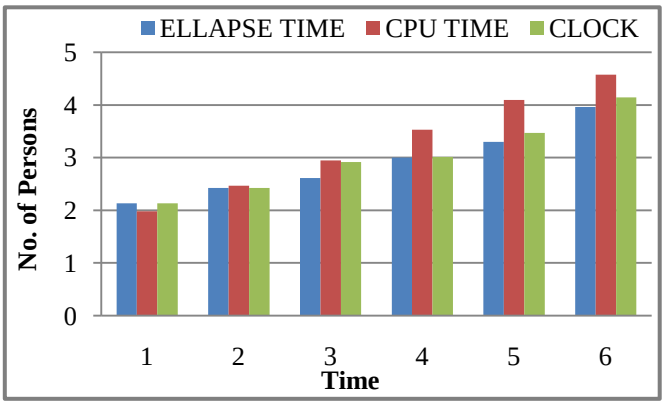

Figure 5: Graph for Spread Value = 0.010

From the above table it is evident that as the spread value increases the system acts to be much more speeder.

VI. Conclusion and Future Work

The system being designed by using the phase difference feature extraction method, whose output is fed into the BPN proves to be highly effective and efficient. The tabulation even give us an added information that number persons being in the database also affects the code's runtime and moreover the code runs fatly as the spread value increases.

Future enhancement could be that by using principle component analysis the features could be reduced and KLN transform be applied to compare it with the existing system. Using fusion methods systems accuracy level can be increased. Hardware implementation with the best combination of the MATLAB codes is done to obtain the maximum accuracy.

References

[1] G.S. Badrinath & Phalguni Gupta (2012), "Palm Print based Recognition System using Phase – Difference Information", *Future Generation Computer Systems*, Vol. 28, Pp. 287–305.

[2] Bob Zhang, Wei Li, Pei Qing & David Zhang (2013), "Palm Print Classification by Global Features", *IEEE Transactions on Systems, Man and Cybernetics: Systems*, Vol. 43, No. 2.

[3] Priyanka Somvanshi & Milind Rane (2012), "Survey of Palm Print Recognition", *International Journal of Scientific & Engineering Research*, Vol. 3, No. 2.

[4] Dakshin Rajan Kishu, Ajita Rattan, Phalguni Gupta, Jamuna Kanta Sing & C. Jinshong Hwang (2012), "Human Identity Verification using Multispectral Palm Print Fusion", *Journal of Signal and Information Processing*, Vol. 3, Pp. 263–273.

[5] Dewi Yanti Liliana & Eries Tri Utaminingsih (2012), "The Combination of Palm and Hand Geometry for Biometrics Palm Recognition", *International Journal for Video and Network Security*, Vol. 2, No. 01.

[6] Ngoc-Son Vu, Hannah M. Dee & Alice Caplier (2012), "Face Recognition using the POEM Descriptor", *Pattern Recognition*, Vol. 45, Pp. 2478–2488.

[7] Micheal Choras & Rafal Kozik (2011), "Contactless Palm Print and Knuckle Biometrics for Mobile Devices", *Pattern Analysis and Applications*, Vol. 15, No. 1, Pp. 73–85.

[8] Lin Zhang, Lei Zhang, David Zhang & Zhenhua Guo (2012), "Phase Congruency Induced Local Features for Finger-Knuckle-Print Recognition", *Pattern Recognition*, Vol. 45, Pp. 2522–25311.

[9] Zhenhua Guo, David Zhang, Lei Zhang, Wangmeng Zuo & Guangming Lu (2011), "Empirical study of light source selection for Palmprint Recognition", *Pattern Recognition Letters*, Vol. 32, Pp. 120–126.

[10] David Zhang, Zhenhua Guo & Lei Zhang (2011), "Online Joint Palm Print and Palmvein Verification", *Expert Systems with Applications*, Vol. 38, Pp. 2621–2631.

[11] Yangqiang Zhang, Dongmeni Sun, Zhengding Qiu (2011), "Hand based Single Sample Biometrics Recognition", *Neural Computers and Applications*, Vol. 21, No. 8, Pp. 835–1844.

[12] Adams Kong, David Zhang & Mohammed Kamel (2009), "A Survey of Palm Print Recognition", *Pattern Recognition*, Vol. 42, Pp. 1408–1418.

[13] Tee Connie, Andrew Beng Jin & Micheal Goh Kah Ong (2005), "An Automated Palm Print Recognition system", *Image and Vision Computing*, Vol. 23, Pp. 501–505.

[14] Xiangqian Wu, David Zhang, Kuanquan Wang & Bo Huang (2004), "Palmprint Classification using Principal Lines", *Elsevier, Pattern Recognition*, Vol. 37, Pp. 1987–1998..

[15] Jiwen Lu, Yongwei Zhan, Yanxue Xue & Junlin Hu (2008), "Palm Print Recognition via Locality Preserving Projections and Extreme Learning Machine Neural Network", *International Conference on Signal Processing*, Pp. 2096–2099.

[16] Guangming Lu & David Zhang (2003), "Palm Print Reconstruction using Eigen Palm Features", *Pattern Recognition Letters*, Vol. 23, Pp. 1463–1467.

SG. Siddharth. He received his B.E., (Electronics and Instrumentation Engineering) degree from Anna University, Chennai. He is doing his final year Post graduate in Embedded Systems (Electronics and Communication Engineering) in Bannari Amman Institute of Technology, Sathyamangalam. He is currently undergoing his project work in the area of biometrics. His research interest includes Biometrics, Image Processing and Neural Networks. He has published 4 papers in International and 6 papers in National Conferences in various fields.