Integration of modern data management practice with scientific workflows

Neil E B Killeen[1,2], Jason M Lohrey[3], Michael Farrell[4], Wilson Liu[1], Slavisa Garic[5], David Abramson[5], Hoang Nguyen[5] and Gary Egan[6]

[1] Centre for Neuroscience Research, University of Melbourne, Victoria, Australia

[2] Information Technology Services, University of Melbourne, Victoria, Australia

[3] Arcitecta Pty. Ltd, Victoria, Australia

[4] Florey Neuroscience Institutes, Melbourne, Victoria, Australia

[5] Faculty of Information Technology, Monash University, Clayton, 3800, Victoria, Australia

[6] Faculty of Medicine, Nursing and Health Sciences, Monash University, Clayton, 3800, Victoria, Australia

Overview

- Introduction
- Tools & Technologies used
- Integration of those tools
- New Components
- Case Study and Results
  - Application and Computation results
- Conclusions and future work

Introduction

- Practical limitations with data handling processes
  - Poor data management
    - raw and processed
  - Poorly defined quality controls
  - Poorly defined processing workflows
- Researchers should aim to
  - Automate data capture
  - Automate processing via workflows
  - Integrate workflows with data management

Introduction

- The goal of the work presented
  - Create an integrated software environment
    - Address the challenges mentioned earlier
- Technologies
  - MediaFlux - Asset management platform
  - DaRIS - PSSD data model framework
  - Kepler - Scientific Workflow Management System
  - Nimrod - Nimrod/G and Nimrod/K

Introduction

- Case Study
  - Automated analysis of fMRI brain scans
  - Look for correlation between cerebral blood flow and the pain experienced by patients

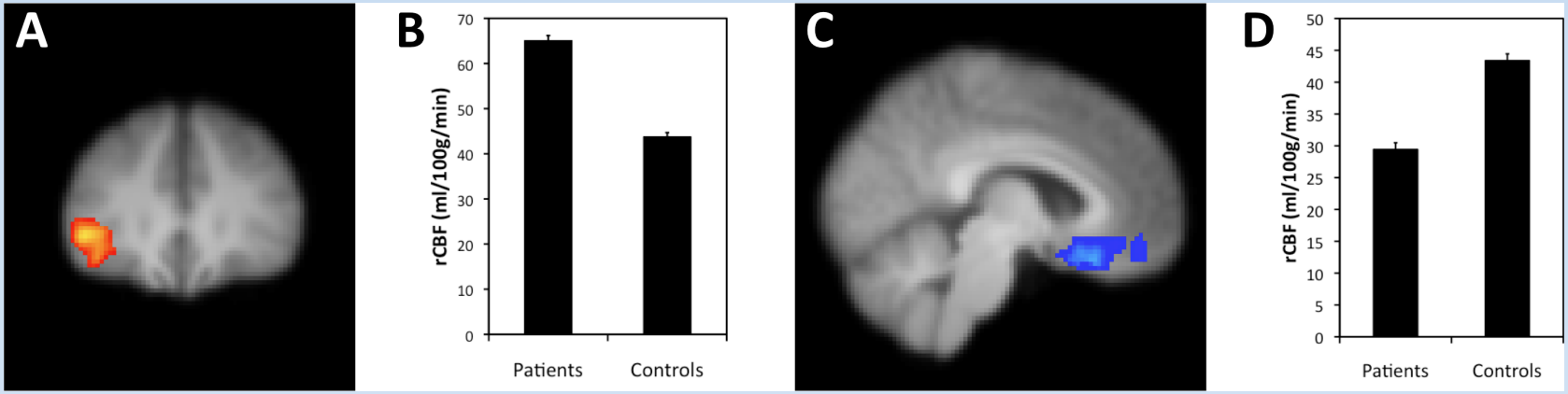

MediaFlux

(Arcitecta Pty Ltd)

- Service oriented data operating system
  - Manages provenance of all data
  - Manages relationships of all data
- Server is developed in Java
  - Client access by HTTP, NFS, Java, .Net, JavaScript
- Manages datasets in “Assets”
  - May have 0 or more content components (binary or other data)
  - Associated metadata which is egested as plain text XML

http://www.arcitecta.com/Products/Mediaflux

MediaFlux

(Arcitecta Pty Ltd)

- Capabilities presented as set of services
  - Services used for finding, storing and retrieving assets
  - Services for data analysis and transformation
- MediaFlux servers can be grouped
  - Globally servers are identified with a unique ‘uiid’
  - Globally assets are identified with a unique (‘uuid’, ‘asset id’) pair
- Strong authorization model
  - Each repository has independent access control

http://www.arcitecta.com/Products/Mediaflux

MediaFlux

(Arcitecta Pty Ltd)

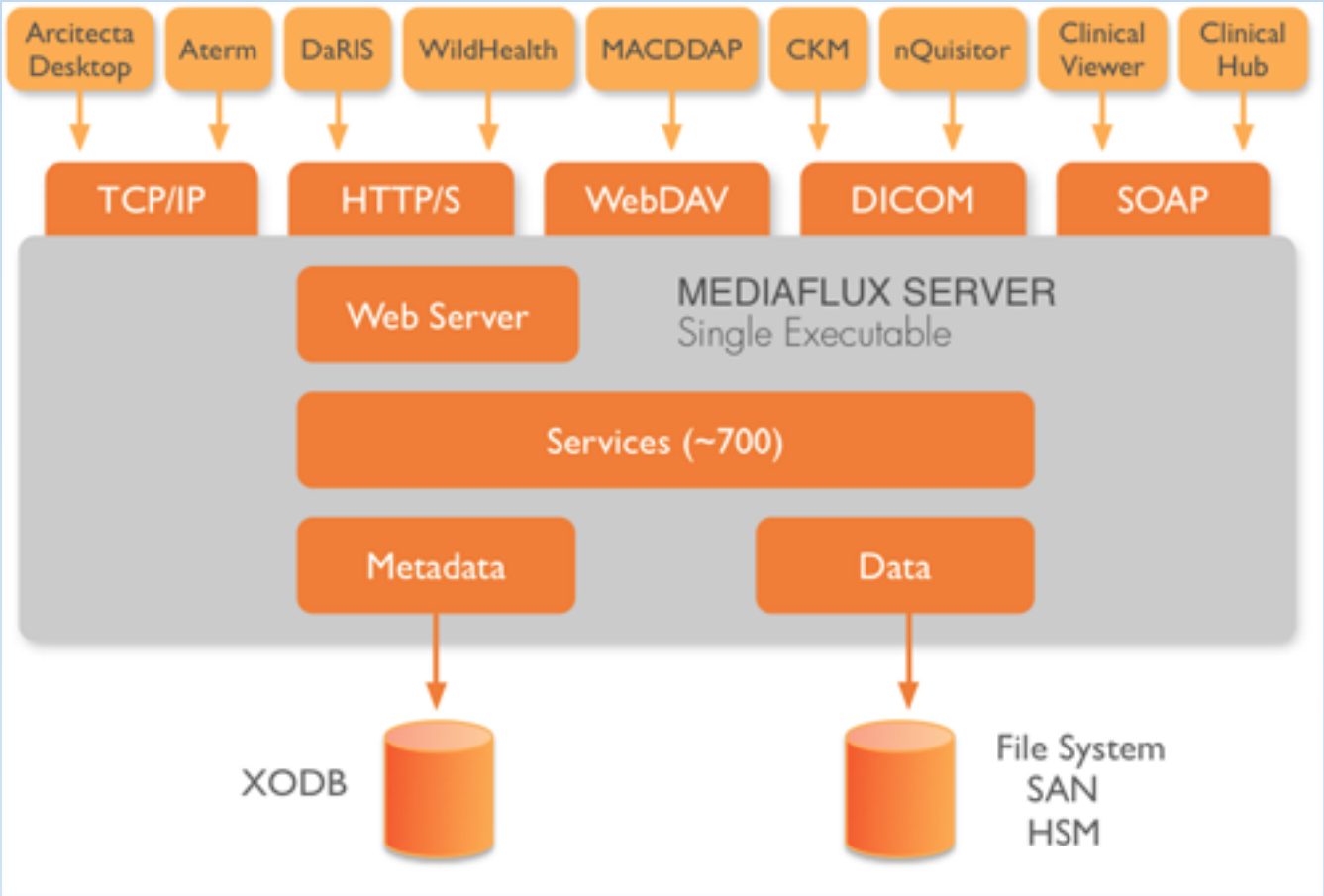

http://www.arcitecta.com/Products/Mediaflux

DaRIS

(Centre for Neuroscience Research, University of Melbourne)

- Data model – PSSD
  - Applies to studies on variety of subject types
  - Objects have citable identifiers
- Set of MediaFlux Plugin service
  - Data-model driven
  - DaRIS includes clients for uploading specialised data formats
- Web base portal
  - Google Web Toolkit implementation
  - It has knowledge of the framework
  - Has no knowledge of domain specific metadata or Methods

DaRIS

(Centre for Neuroscience Research, University of Melbourne)

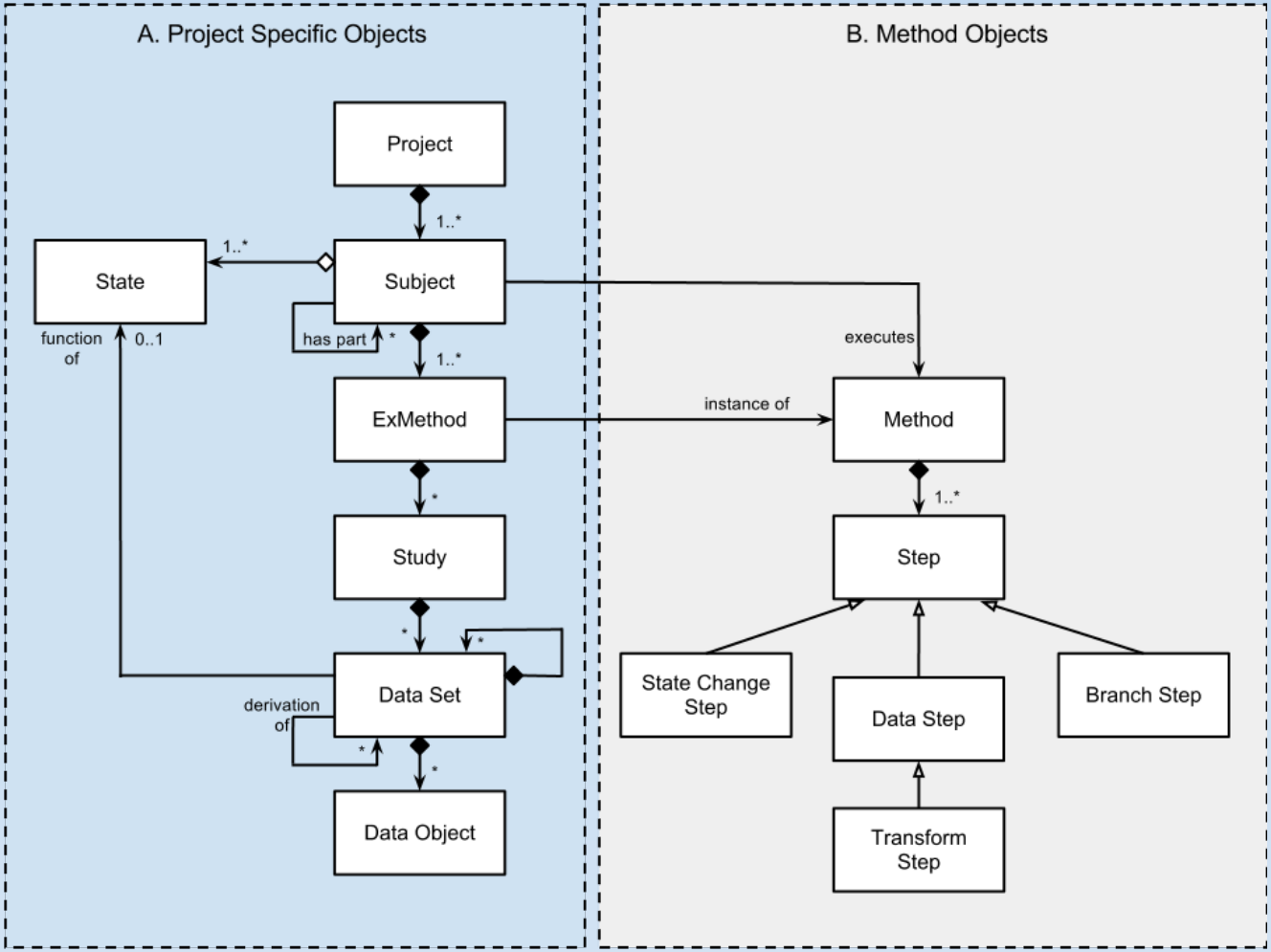

http://www.cns.unimelb.edu.au/

Nimrod Tools

(MeSsAGE Lab - Monash University)

- Nimrod/G
  - Parametric experiment execution
  - Distributed scheduling
    - Manages the scheduling across all available resources
    - Can scheduler to meet user defined time or budget constrains
  - Interfaces with Grid Middleware
    - Condor, SGE, Globus Toolkit
    - Cloud systems – Amazon's EC2 or Microsoft's Azure

Nimrod Tools

(MeSsAGE Lab - Monash University)

- Nimrod/K
  - Provides Nimrod/G functionality
    - Built on Kepler's runtime engine
    - Uses Nimrod/G to run computations on the Grid
  - Scheduler that can be changed dynamically
  - New custom Tagged Dataflow Arcitecture Director
    - TDA supports concurrent threads of execution in the workflow itself
    - No change required to existing actors to run under TDA Director

Nimrod/K – GridJob Actor

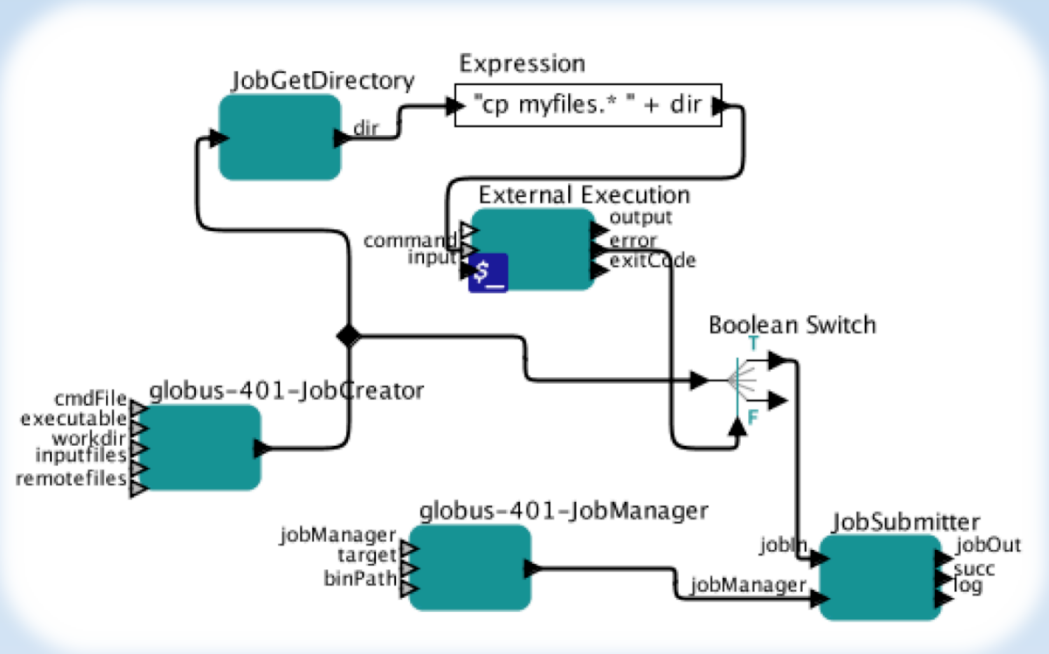

Integration

(Arcitecture – PSSD Methods)

- Presently experimental methods have
  - Subject state change – a record of state change in the experimental system
  - Data Set – the acquisition of data and related metadata
  - Branching – a decision point where one or more paths may be followed
- Transition between these steps is manual

Integration

(Arcitecture – PSSD Methods)

- Transform Step
  - Context on how to execute data transformation – eg. computational workflow

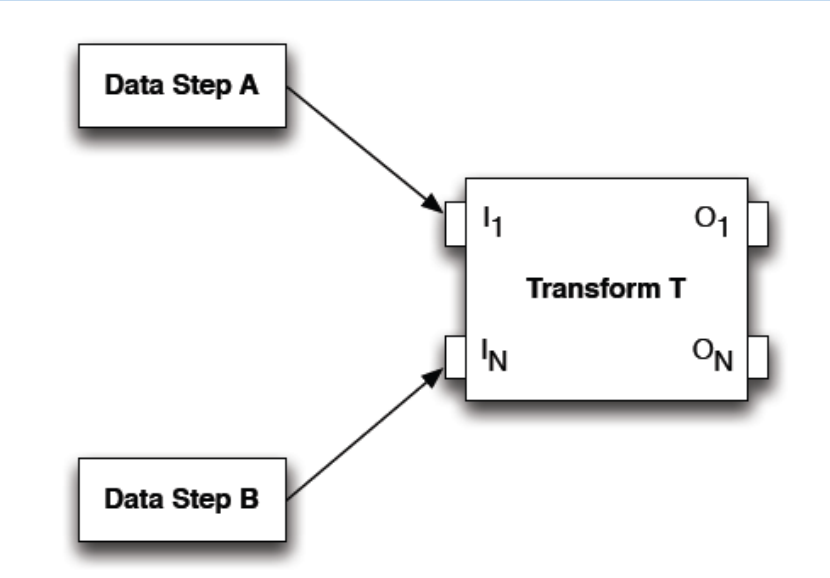

- Defines
  - Inputs/outputs
  - Optional parameters
  - Transformation itself
- Output of one Transform Step may be used as an input to another Transform Step

Integration

(Arcitecture – PSSD Methods)

- Transform Service Provider
  - MediaFlux Service
  - Must be able to control and monitor executions of Transform Steps
- Executed on one or more resources
  - Researcher is provided with options to choose
- Re-execute option available
  - With new parameters
  - Existing data could be kept or discarded – decision made by a researcher

New Components

(Implementation)

- MediaFlux Transform Framework
  - Transform Provider – controls and monitors the transformation
  - Transform Definition – definition of transform process
    - Parameter definitions
  - Transform Instance – actual instance of the transform in MediaFlux
    - Current state of the execution
    - Parameter values
  - Transform Output – stored as assets in MediaFlux

New Components

(Arcitecture – PSSD Methods)

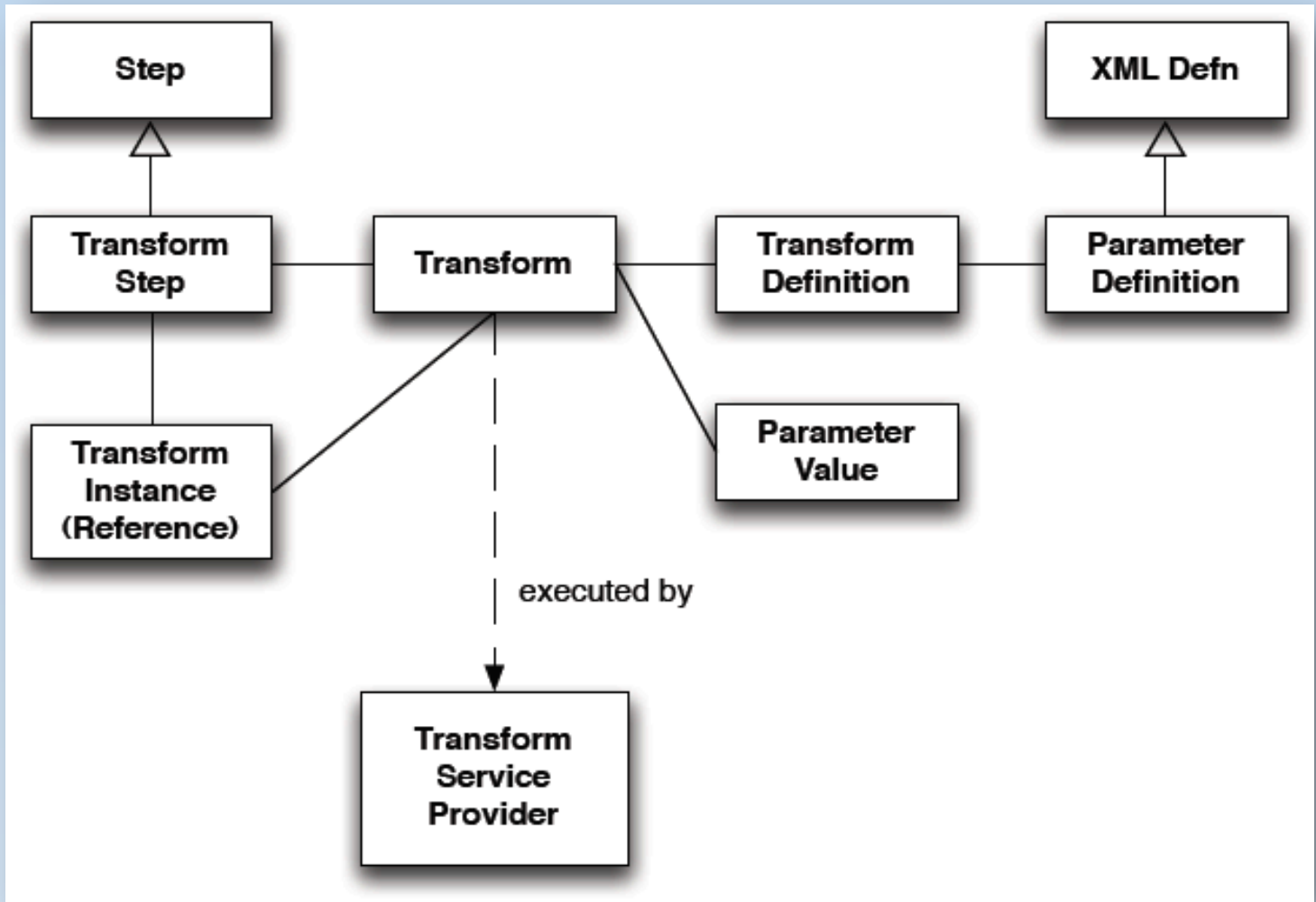

http://www.arcitecta.com/Products/Mediaflux

New Components

(Implementation)

- PSSD Data Model
  - Transform Step in PSSD
    - References Transform Definition (how to execute external process or computational workflow)
    - Select inputs and outputs for the Transform Step
  - Virtual Subjects
  - PSSD Services
  - New metadata for processed data

New Components
(Implementation)

- Nimrod/K
  - Kepler Transform Service Provider
  - Remote control of the Workflow Execution
    - Start, Suspend, Resume and Terminate
  - MediaFlux Actors
    - Retrieve assets from a MediaFlux repository
    - Create and store new assets to a MediaFlux repository
  - Improvements to the Nimrod/K core
    - Nimrod/K Director – Execution control
    - GridJob Actor – Directory transfers, file filtering, placeholder substitution

Case Study - Background

(Imaging Clinical Pain)

- Identify brain activation associated with the low back pain in people with musculoskeletal disease
  - fMRI for acquired for two groups of participants
  - Data acquired consisted of
    - Structural brain image
    - Functional brain images acquired every 6 seconds
    - Participants pain rating acquired every minute
  - Identical analysis of data for all participants
    - Healthy participants used pain ratings of matched patient with low back pain

Case Study - Background

(Imaging Clinical Pain)

- Measured regional cerebral blood flow (rCBF)
  - Estimated from fMRI
- Correlated with pain ratings acquired during fMRI scan
  - Together with rCBF these help identify brain structures that have some relation to pain intensity
- Healthy to in-pain participant matching was done on basis of age and sex

Case Study - Data

(Imaging Clinical Pain)

- Data was captured manually and stored in a DaRIS repository at University of Melbourne
- PSSD model was used to organise the data
  - Asset created for each subject (participant)
  - Pain rating was included with corresponding acquired data

Case Study - Execution

(Imaging Clinical Pain)

- Created a Kepler Workflow
- Process manually started in PSSD model
- Nimrod/K runs the selected workflow with user specified parameters
  - Dataset IDs, server IDs etc
- Produces a DataSet for each analyzed subject

Case Study - Execution

(Imaging Clinical Pain)

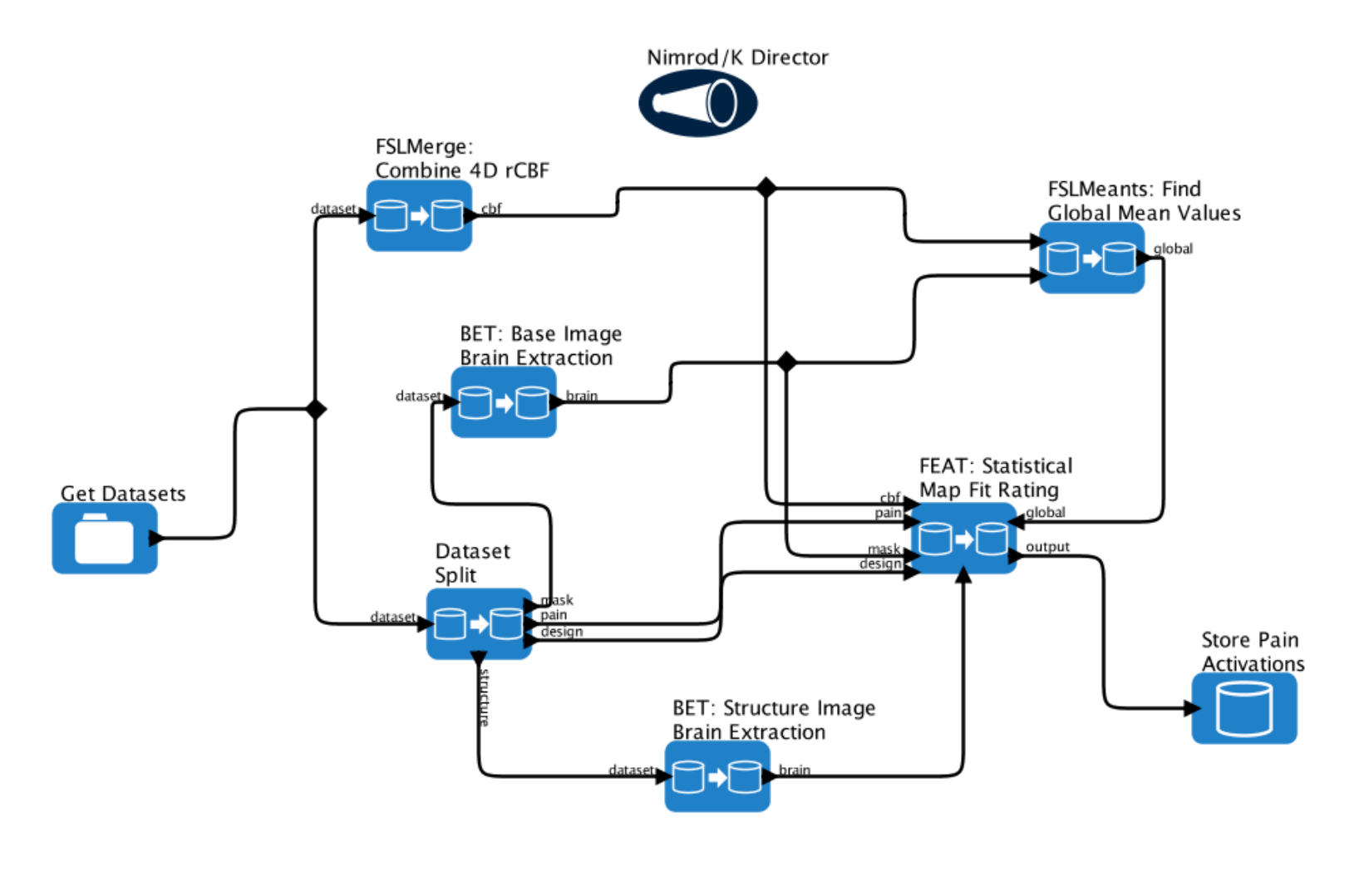

Case Study - Execution

(Imaging Clinical Pain)

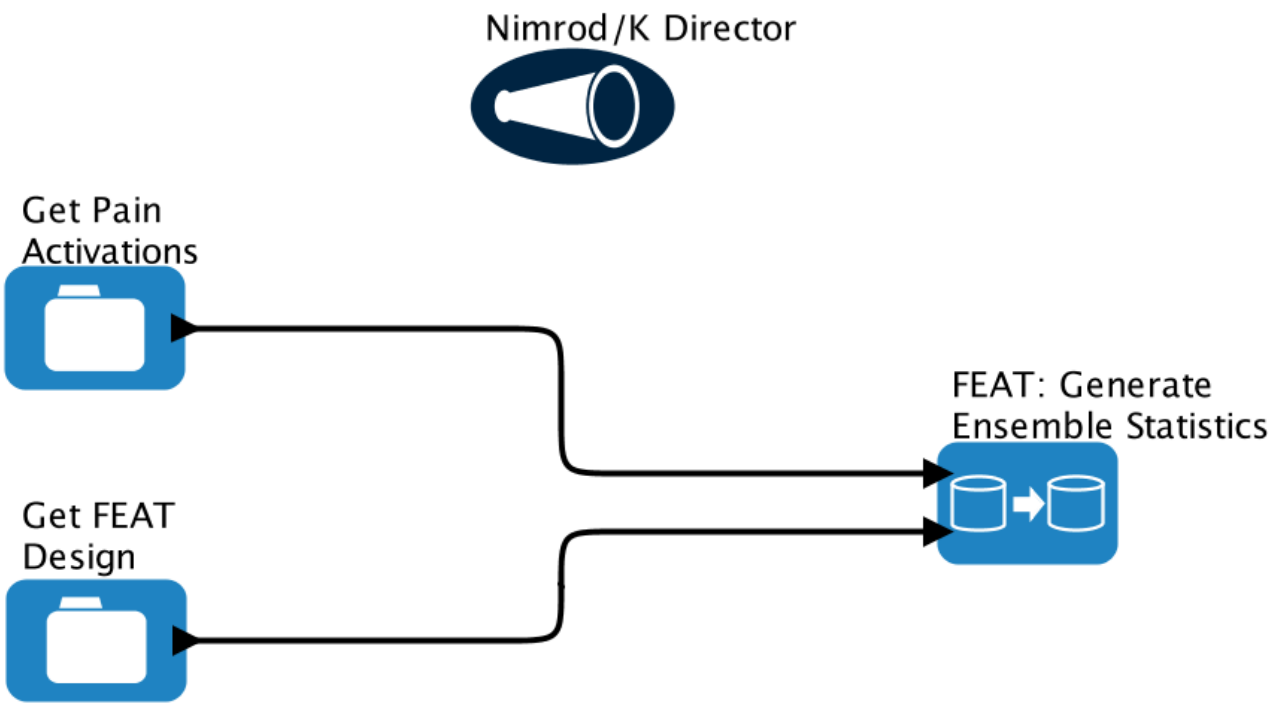

Case Study – Results

(Imaging Clinical Pain)

- Results show that low back pain participants have
  - Decreased levels of blood flow in subgenuel cingulate cortex
  - Increased levels of blood flow in left inferior frontal gyrus

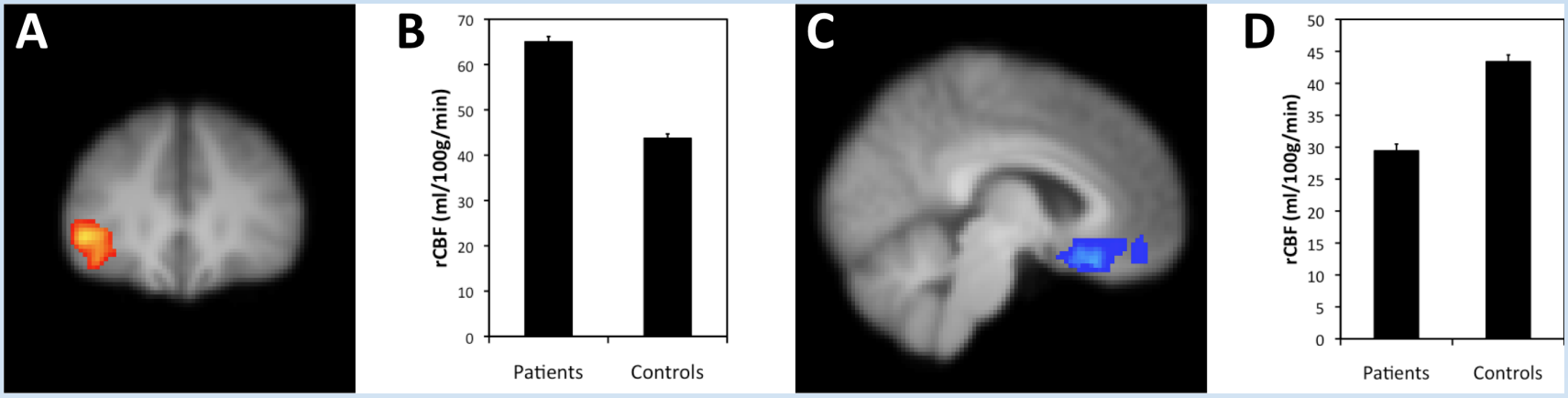

Case Study
Computational Results

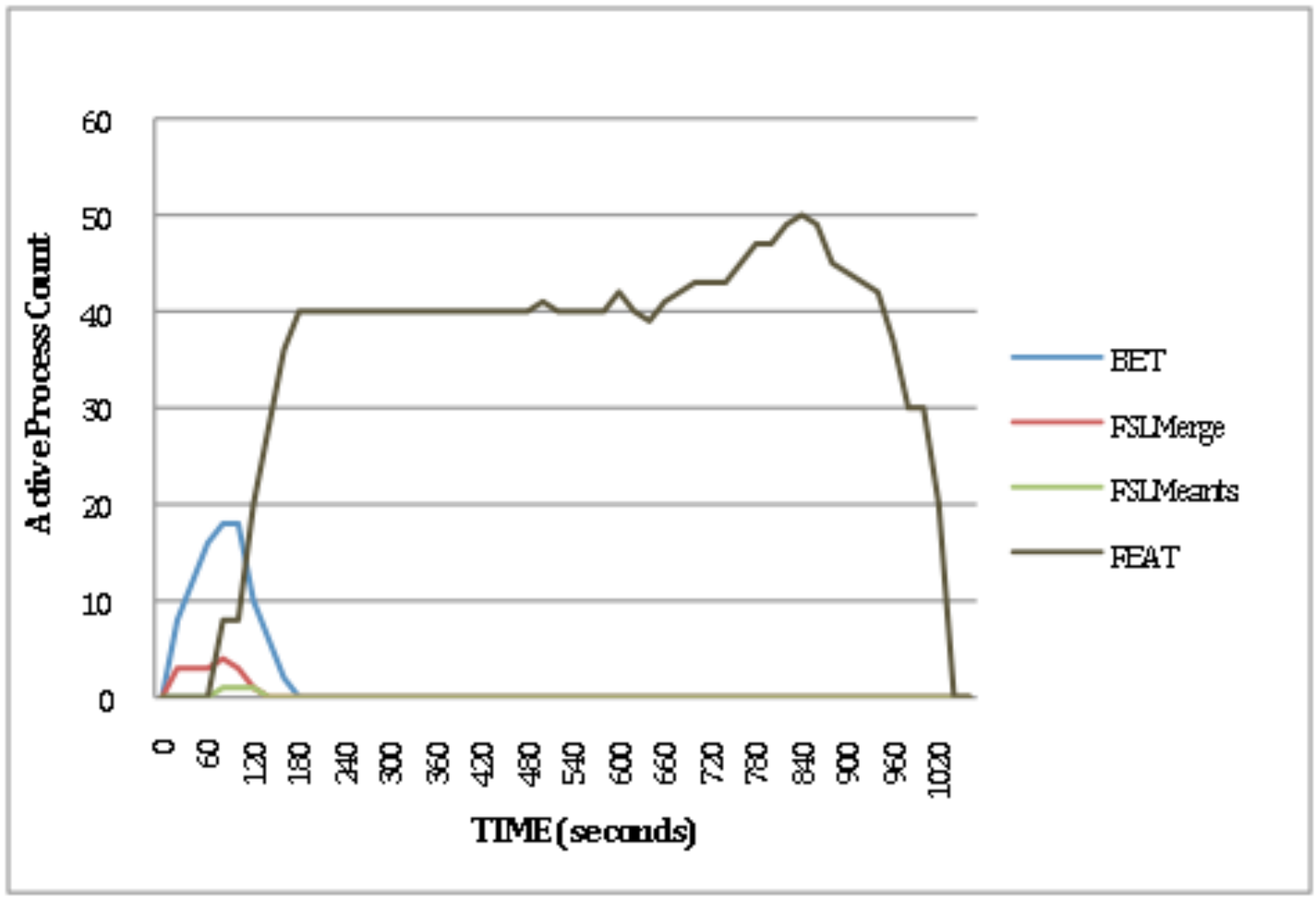

Conclusion & Future Work

- This paper discusses the enhancement done to DaRIS repository and Nimrod/K workflow environment
  - Transform Framework
  - Remote control of Nimrod/K workflow execution
  - New actors that interact with MediaFlux
  - Improvement of current Nimrod/K components
    - Nimrod/K Director
    - GridJob actor

Conclusion & Future Work

- Identity management
- DaRIS user interface
- New data transport mechanisms in Nimrod/K
- Improve remote control interface
  - Have a service that allows users to execute workflows on dedicated remote hosts

Questions?

Slavisa Garic,
slavisa.garic@monash.edu