Development of external and neutrally buoyant acoustic transmitters for turbine passage evaluation

Daniel Deng, Rich Brown, Tom Carlson, Jayson Martinez, Alison Colotelo, Brett Pflugrath, Tylor Abel

Pacific Northwest National Laboratory, Richland, WA

Bob Johnson, Martin Ahmann

U.S. Army Corps of Engineers, Walla Walla District, Walla Walla, WA

EPRI-DOE Conference on Environmentally-Enhanced Hydro Turbines,

May 20, 2011, Washington DC.

Outline

- Introduction to JSATS (Juvenile Salmon Acoustic Telemetry System)
- Design and fabrication of two neutrally buoyant externally attached transmitters
- Evaluation of the external transmitters under non-turbine and turbine conditions.
- Conclusions and recommendations.

Juvenile Salmon Acoustic Telemetry System (JSATS) components

- The JSATS consists of acoustic microtransmitters, receivers, and data management and processing software.

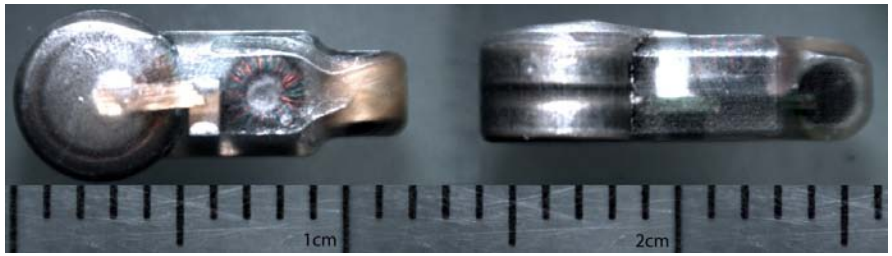

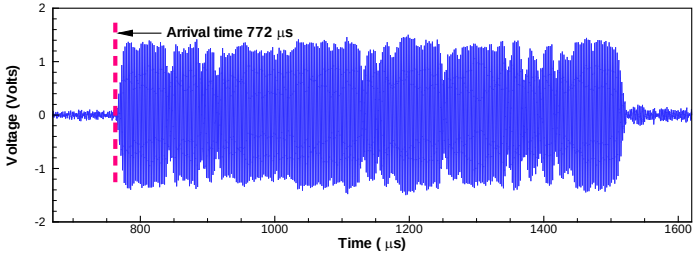

(a)

(b) 2010 Model

2008 Model

Internally implanted transmitters lead to bias in survival estimates through turbines

- An alternative is needed so unbiased survival estimates can be attained
- Two neutrally buoyant and externally attached JSATS transmitters were implemented and evaluated: Type A design (Mohawk) and Type B design (two-part saddle bag)

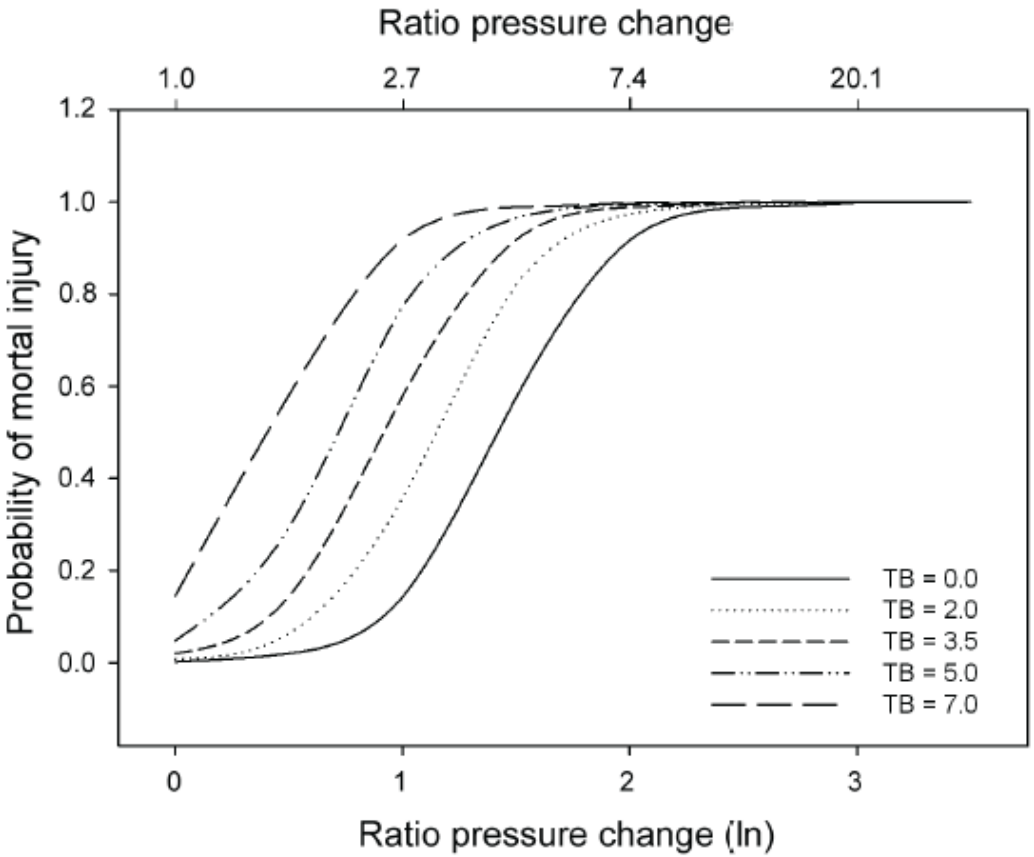

Type A (Mohawk) Design: CAD drawings

- Maximum width: 9.3 mm
- Maximum length: 18.5 mm
- Weight: 0.60 g in air
- Volume: 0.60 cc
- Attached anterior to the dorsal fin

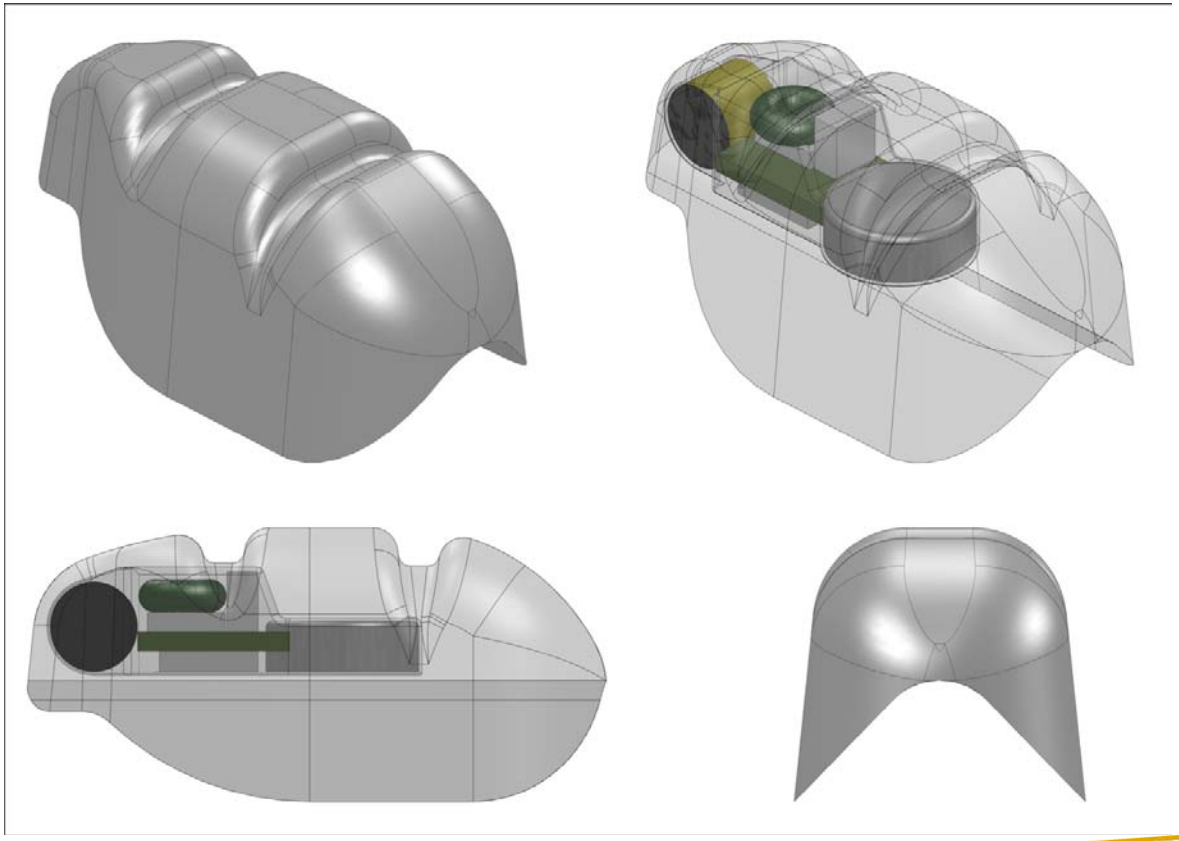

Type A (Mohawk) Design: Molds

- Two-part mold with ping hole for injection
- Three-dimensional printer for prototyping
- CNC machined from aluminum bar stock for final product

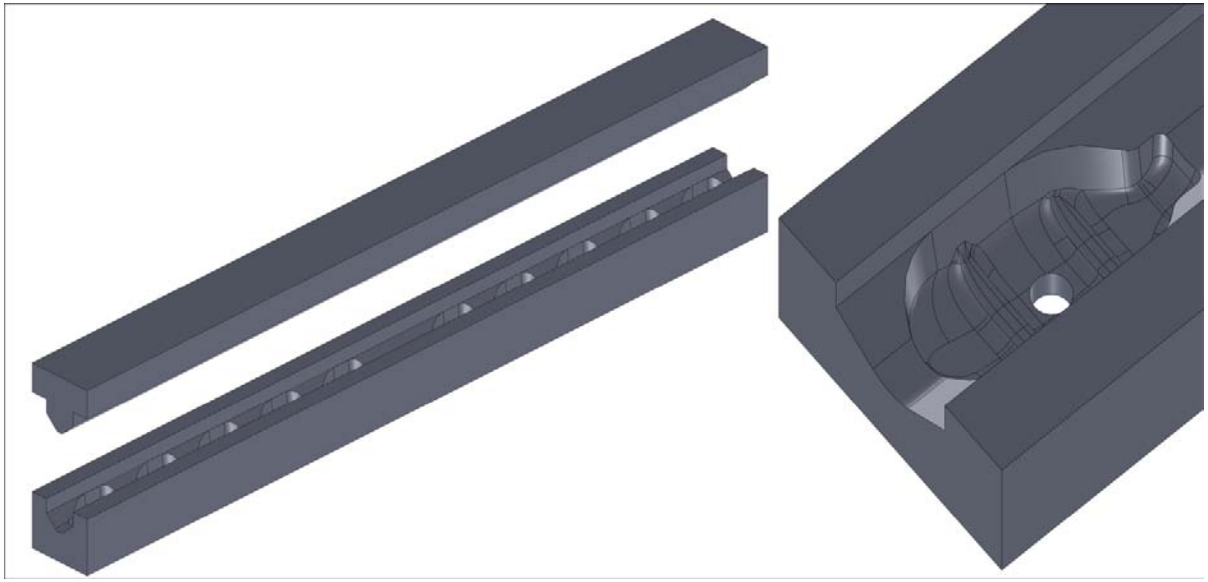

Type A (Mohawk) Design: Attachment

- Anterior to the dorsal fin
- Two suture rested in grooves formed in the tag to improve retention

Type B (two-part saddle bag) Design: CAD drawings

- Both parts neutrally buoyant
- 25-gauge enamel coated magnet wires (attached to the battery side)
- Battery side: 0.41 g in weight and 0.41 cc in volume
- Transducer side: 0.43 g in weight and 0.43 cc in volume
- Two holes for self-locking electrical terminals

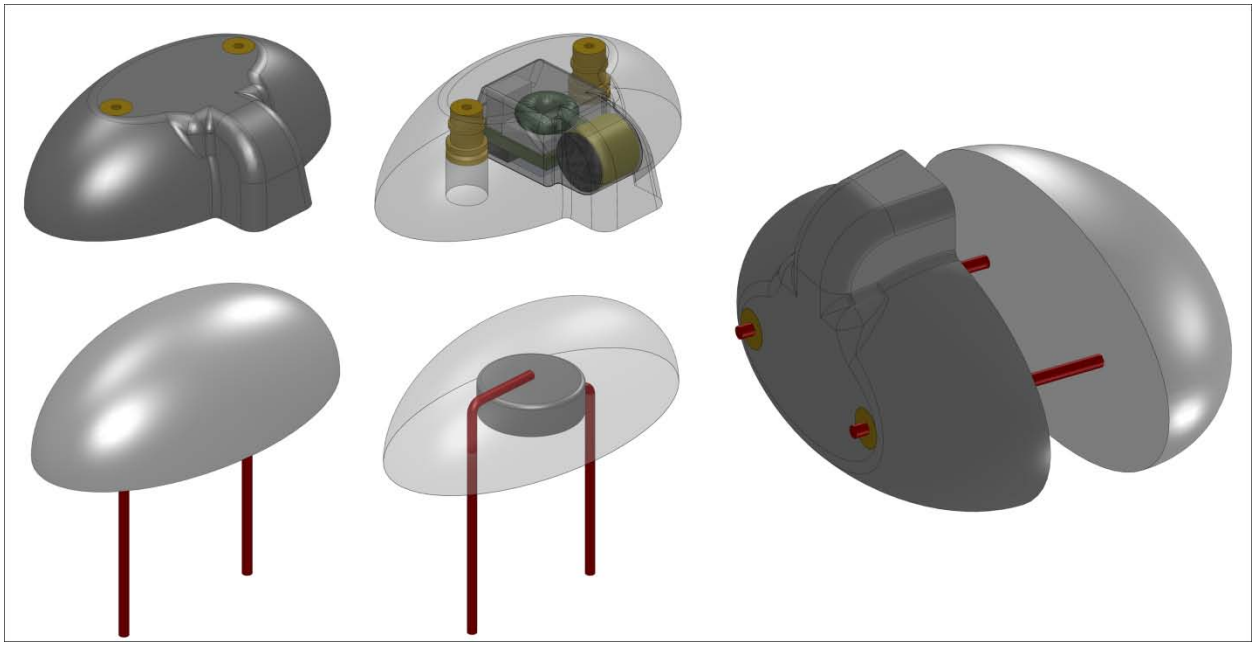

Type B (two-part saddle bag) Design: Molds

- One cavity for battery side and one cavity for transducer side
- Three-dimensional printer for prototyping
- CNC machined from aluminum bar stock for final product

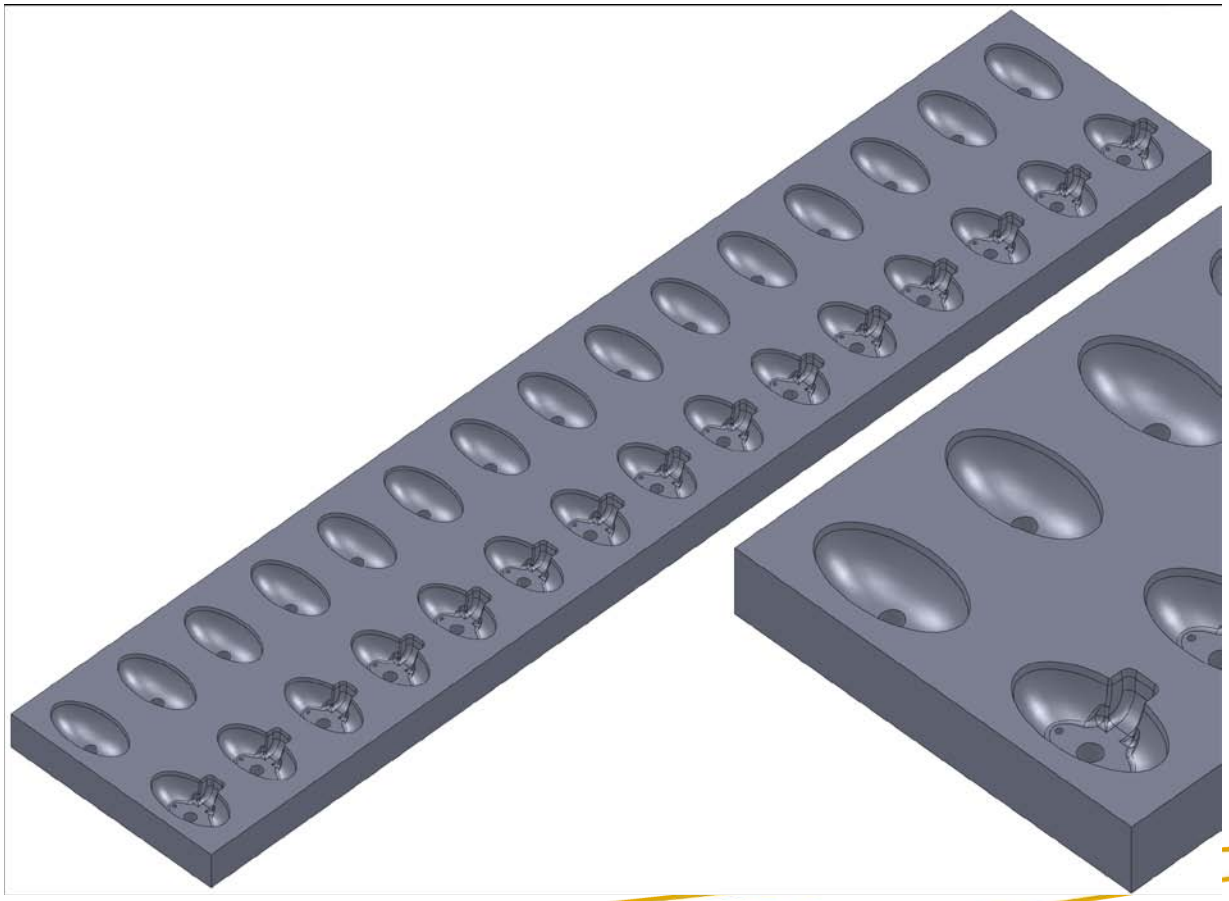

Type B (two-part saddle bag) Design: Attachment

- Two 25-7/8-gauge needles were used to pass the magnet wires through the dorsal musculature.
- The wires were threaded and locked through the electrical terminals on the transducer side

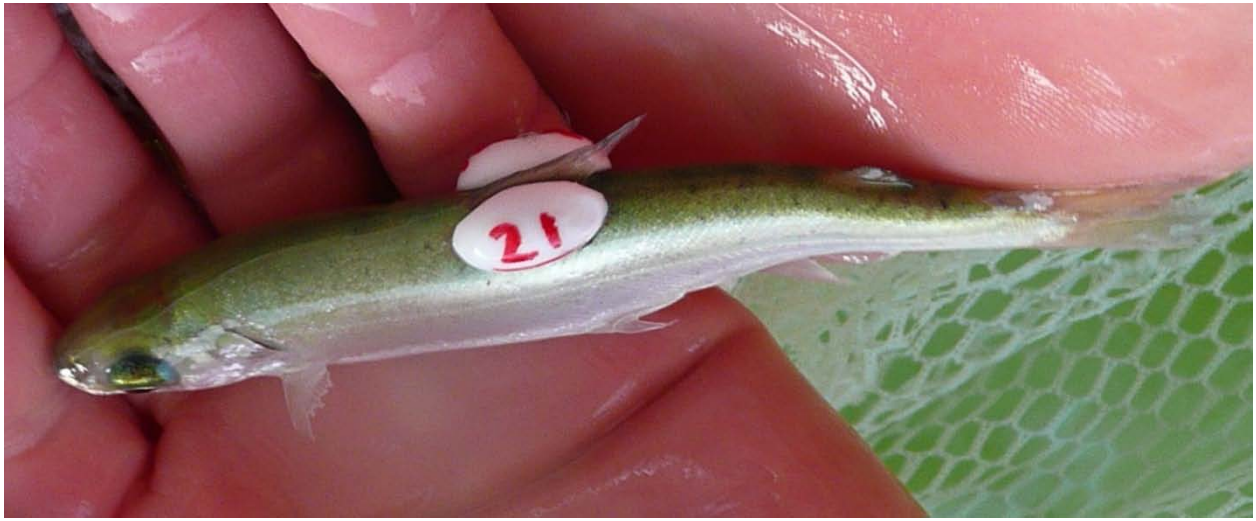

Evaluation criteria

- Biological responses: tag retention and fish growth.
- Exposure to turbulent shear flows to simulate turbine conditions.
- Swimming performance.
- Predator avoidance.
- Mortal injury rates for fish exposed to rapid decompression associated with turbine passage.

Biological responses: tag retention and fish growth

- No mortality occurred in any of the tagged fish over the 14-d holding period.
- Tag retention was high (no transmitter loss until Day 13) over the 14-d holding period.
- No significant differences in the percentage increase in length among the control group, fish tagged with Type A design, or internally implanted fish.
- Although retention of Type B transmitters was slightly higher than that of Type A transmitters, their use resulted in lower growth and more negative tissue response.

Exposure to turbulent shear flows to simulate turbine conditions

- Two transmitter designs and control fish (untagged fish).
- Three nozzle velocities: 3.0 m/s (control), 9.1 m/s, and 12.2 m/s.
- Nine treatments: about 10 samples for control and 20 samples for other treatments.
- Shear injury and tissue damage at the tag attachment location as evaluation variables.

Flume: 9 m x 1.2 m x 1.2 m

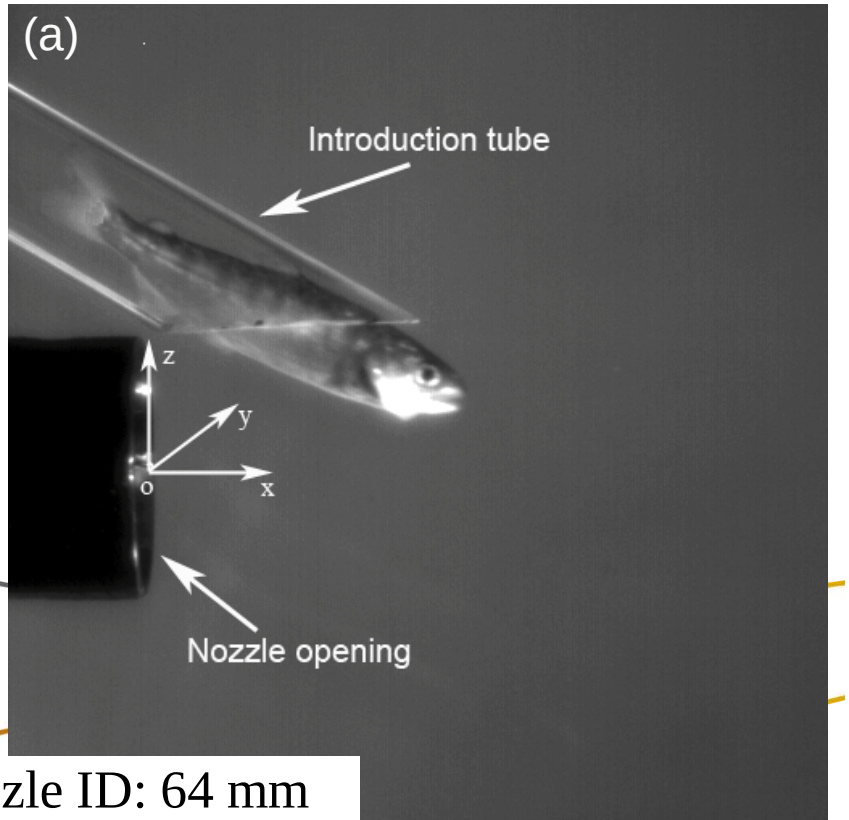

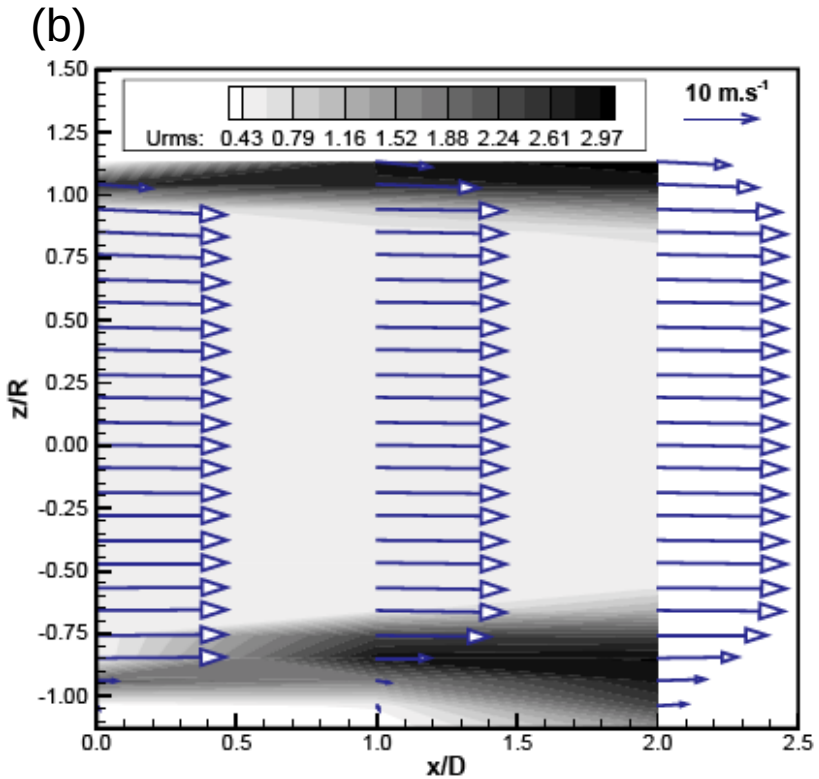

Nozzle ID: 64 mm

Exposure to turbulent shear flows to simulate turbine conditions

- No mortalities were observed throughout the shear exposure study.
- Fish externally attached with Type A tags sustained slightly lower injuries than fish externally attached with Type B tags. However, there was no significant difference in shear injury rates between externally tagged and untagged fish.
- When tissue damage was evaluated within nozzle velocity groups, there were significantly lower levels of tissue damage for fish attached with Type A tags when compared to those attached with Type B tags.

Swimming performance

- Fish tagged with the Type A and B designs had lower swimming performance than nontagged fish.
- No significant difference between internally implanted fish and fish attached with Type A or Type B designs

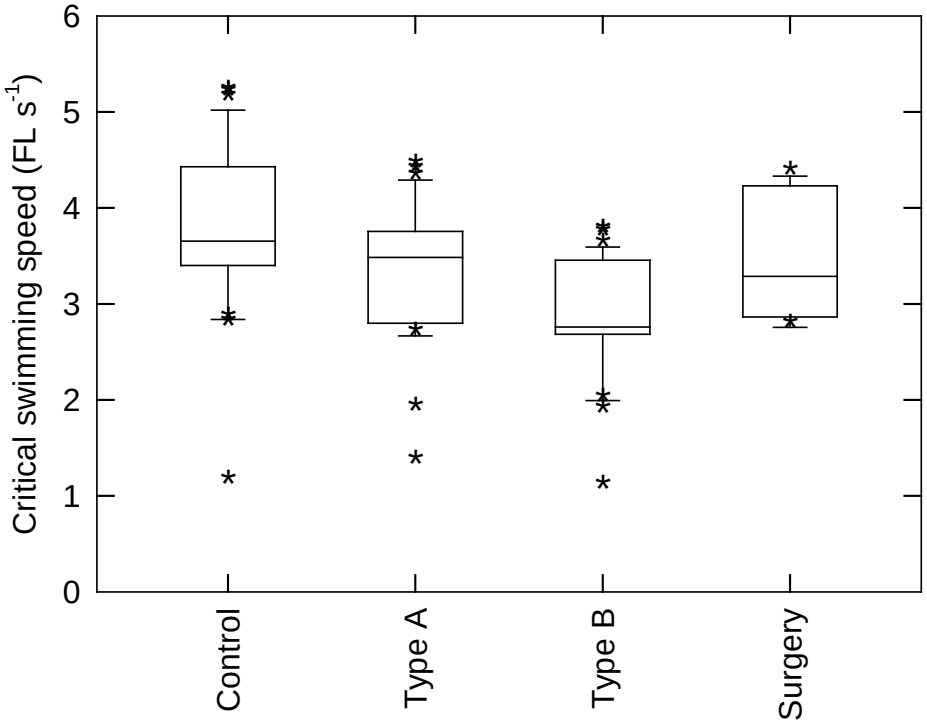

Predator avoidance

- 10 rainbow trout were chosen as predators
- Juvenile fall Chinook salmon were randomly designated as treatment (Type A external transmitter) or control (nontagged) fish for the predation trials.
- Six trials: 10 tagged fish and 10 untagged fish per trial.
- No detectable difference among predation rates of tagged and nontagged fish was found.

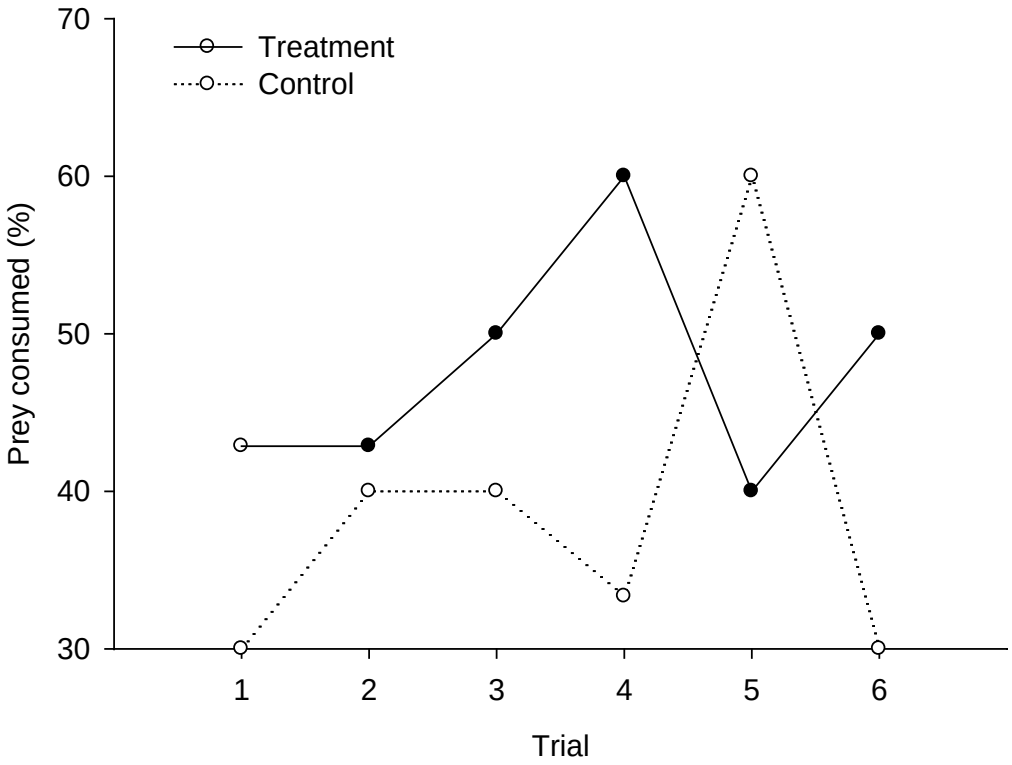

Exposure to rapid decompression associated with turbine passage

- Control fish and Type-A tagged fish: 184 fish each.
- Acclimation pressure was 21.2 psia (or 15 ft depth) for 16–24 h.
- Exposure nadir ranged from 1.6 to 11.6 psia (median = 4.6 psia).
- Rate of pressure change ranged from 129 to 385 psia/s (median = 239 psia/s).

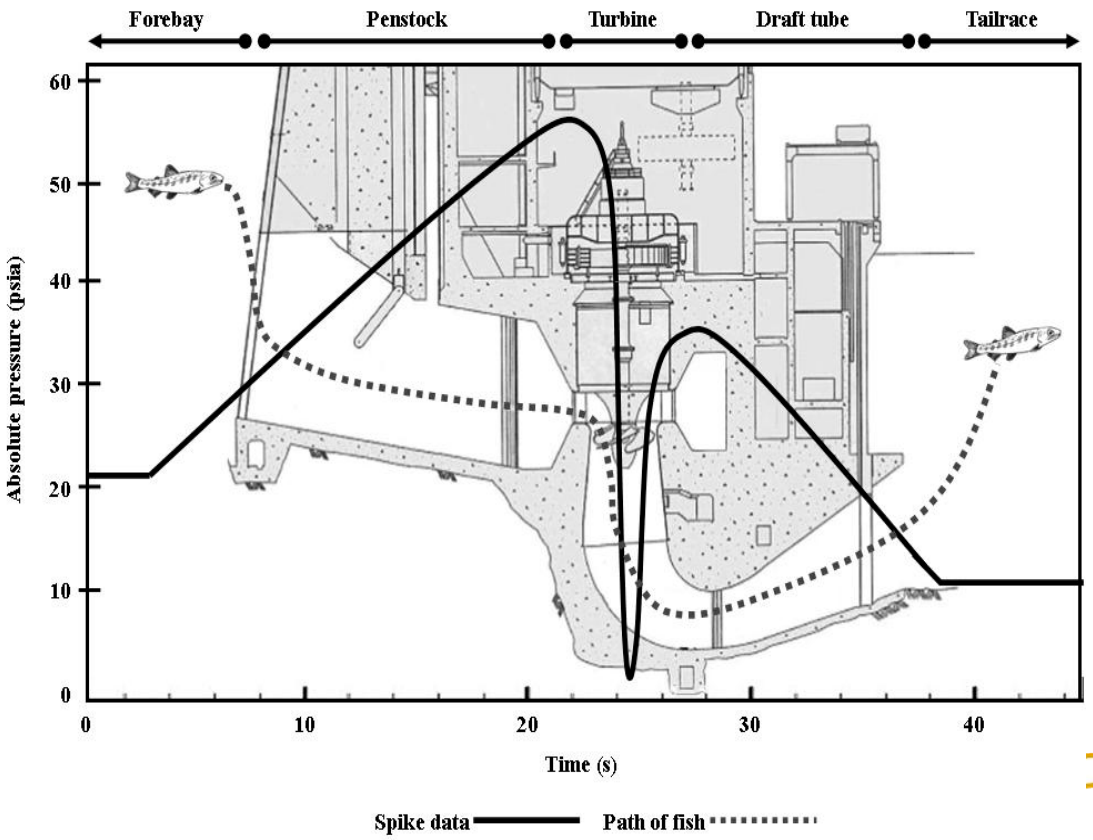

No significant difference in mortal injury between nontagged fish and Type-A tagged fish during simulated turbine passage

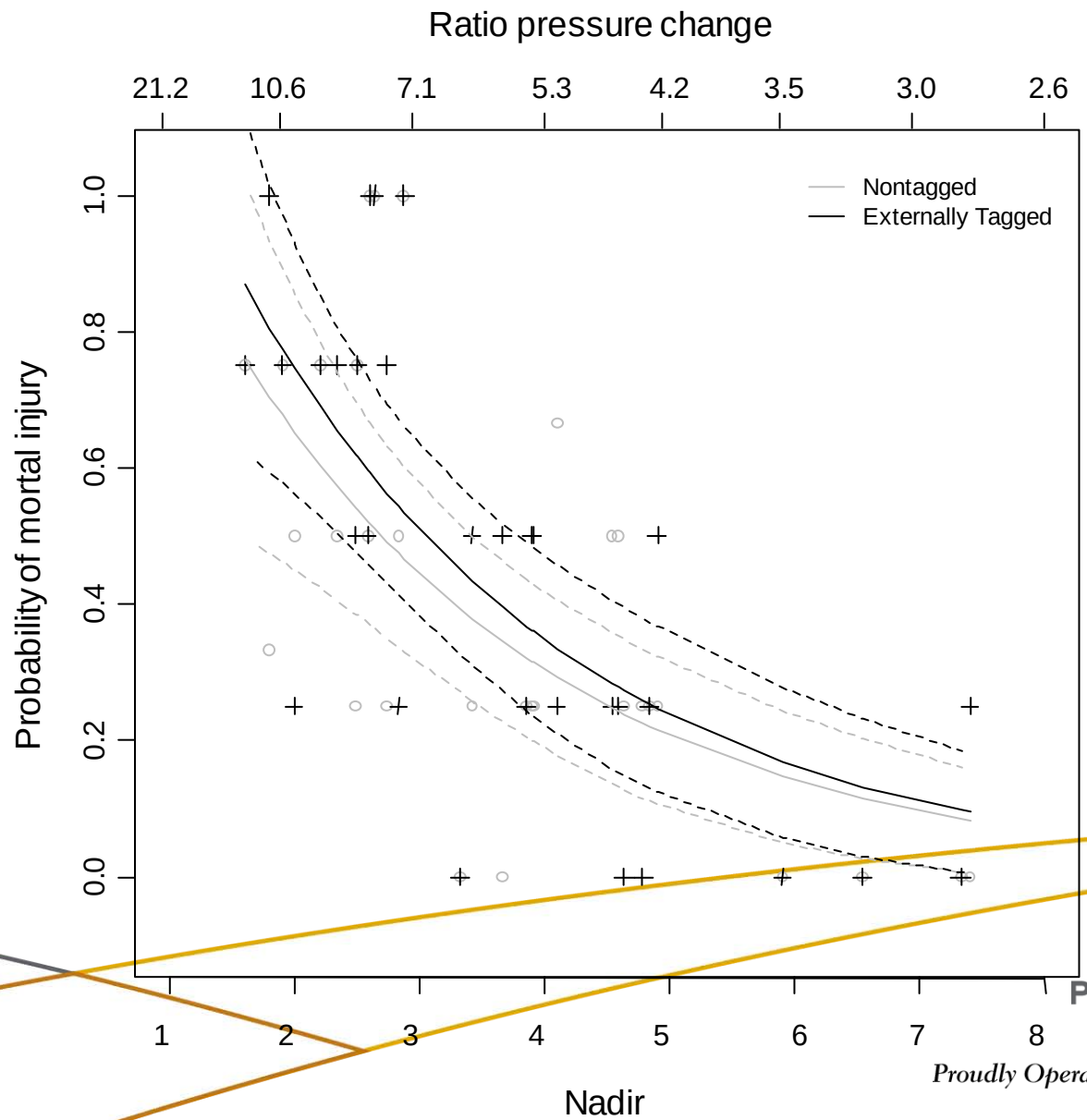

Conclusions and recommendations

- Designed, manufactured, and evaluated two neutrally buoyant externally attached tags. One of them may be an effective design for future turbine passage survival studies in the Columbia River basin.
- Future research should be conducted to test the efficacy of this tag design in field conditions.

Acknowledgements

- Funded by the U.S. Army Corps of Engineers (USACE), Portland District.
- USACE staff, including George Medina, Marvin Shutters, Brad Eppard, Mike Langeslay, Dennis Schwartz and the USACE Turbine Survival Program Technical Team.
- Numerous PNNL staff, including Bob Mueller, Duane Balvage, Andrea Currie, Marybeth Gay, Jill Janak, Curt Lavender, Andrea P. LeBarge, Tim Linley, Geoff McMichael, Mitchell Myjak, Jes Smart, Cory Overman, John Stephenson, Noel Tavan, Ricardo Walker, Mark Weiland.

Thank you.