Wireless Sensor Networks for Monitoring Physiological Signals of Multiple Patients

Reza S. Dilmaghani, Hossein Bobarshad, M. Ghavami, Sabrieh Choobkar, and Charles Wolfe

AUGUST 2011

- Presenter：BO-YING SYU
- Adviser：Dr. Pei-Jarn Chen
- Data：2011/12/14

Outline

- Introduction
- Purpose
- Material and Methods
- Result
- Conclusion
- References

Introduction(1/2)

- The principal reason for a lengthy stay in the hospital is simply continual observation.
- In recent years, emergency admissions and long lengths of stay have become extremely costly.
- Investment in technologies that enable remote monitoring would lead to long-term gains in terms of hospital finances and patient care.

Introduction(2/2)

- Wireless monitoring systems(patient's side)
  - PC
  - PDA
  - Mobile phone

- The main drawbacks
  - Costs
  - Accessibility

Purpose

- A new design of the monitoring system
  - Drastic reduction in costs
  - Ease of use
  - Eliminates the need for a PC、PDA to send patients’ data

Material and methods

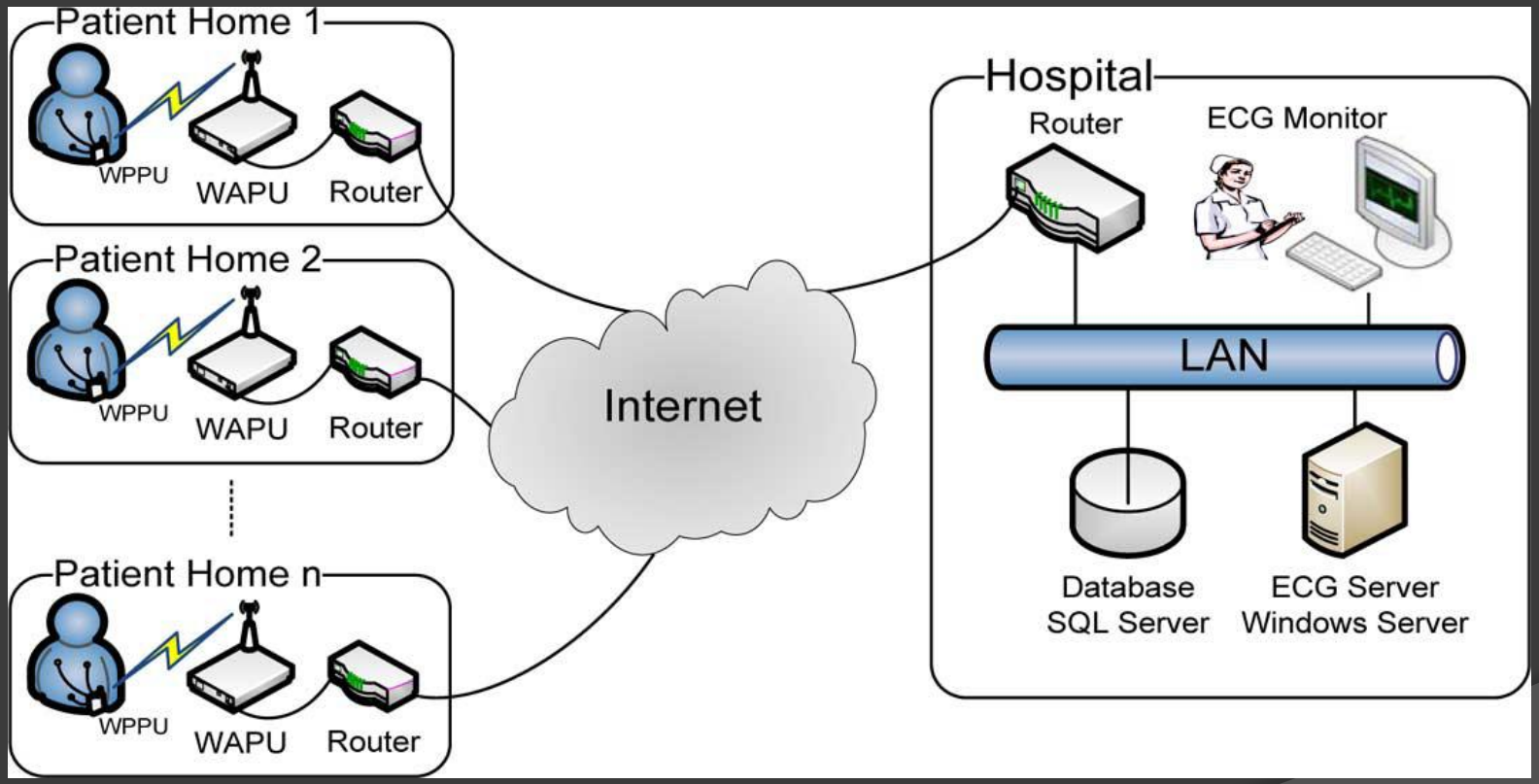

Material and methods

- Two main sections in the system
  - Wireless patient portable unit(WPPU)
  - Wireless-access point unit (WAPU)

WPPU(1/4)

- It consists of two main parts
  - 1、ECG amplifier and noise cancellation
  - 2、Microcontroller and a low-power wireless radio transceiver

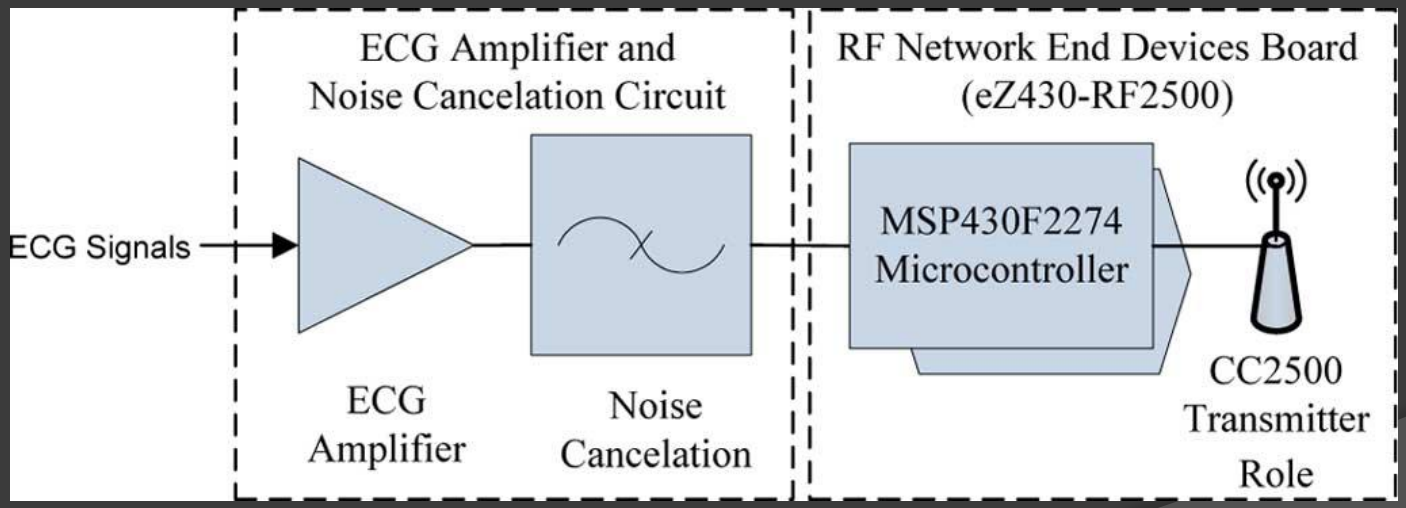

WPPU(2/4)

- ECG amplifier and noise cancellation
  - The ECG signals captured by the sensors have amplitudes of around 1 mV peak-to-peak.
  - The differential signals from the sensors are amplified by an INA2322 cored circuit while rejecting almost all of the common-mode noise.

WPPU(3/4)

- ECG signal sampling
  - Most useful ECG information lies between 0.05 Hz and 150 Hz
  - The Nyquist criterion, the sampling rate must be 0.1 Hz ~ 300 Hz.
  - Assume the acceptable sampling rate to be 200 samples/s.

WPPU(4/4)

- AD converter:
  - The sampling rate is equal to the calling of the ADC10 interrupt service routine which can be obtained by configuring the ADC10 control registers.

- Packetization
  - The four other bits in both bytes of the wireless packet are used for packet numbering.

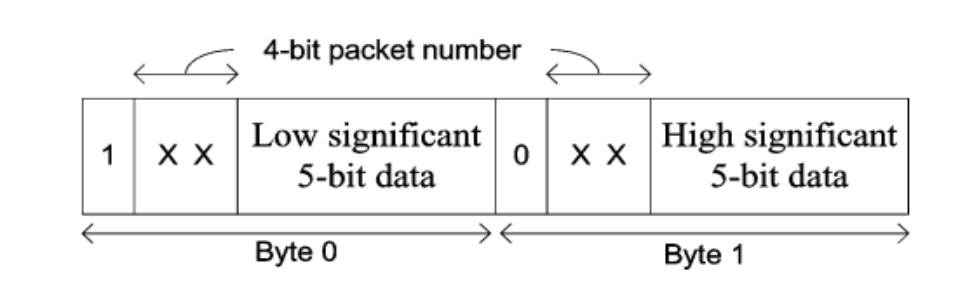

WAPU(1/4)

- As can be seen, the WAPU contains two main boards
  (1) the RF network-access point (RFNAP) board.
  (2) Internet connection board (ICB), which creates TCP/IP packets.

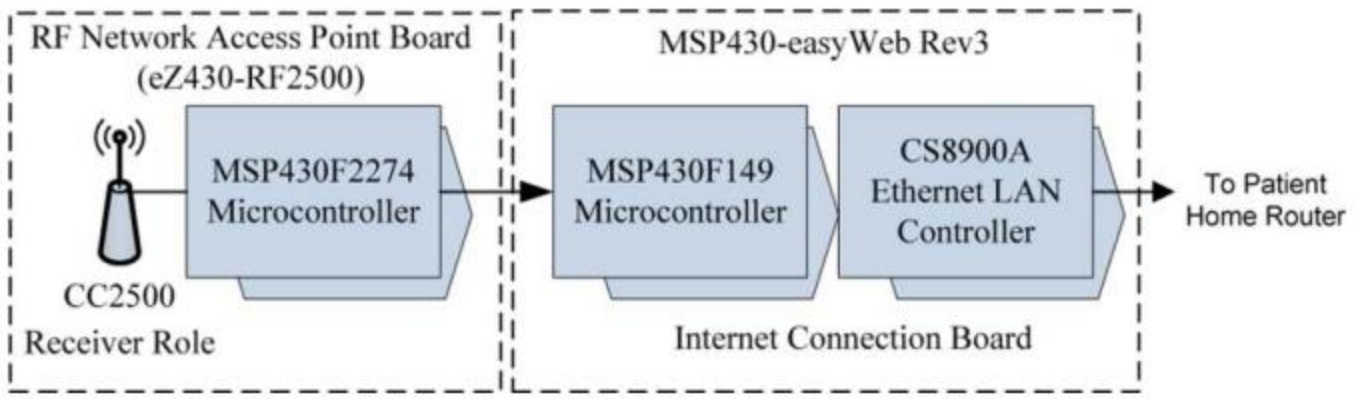

Fig. 5. Wireless-access point unit (WAPU) block diagram.

WAPU(2/4)

- The three main requirements for the RFNAP firmware :

  (1) network connection management.

  (2) reception of wireless packets.

  (3)sending the received wireless packets toward the ICB through a serial port.

- Once a connection is established between the Link-To and the Link-Listener structures, the RF Network Access Point firmware handles the received packets from RF Network End Devices.

WAPU(3/4)

- The ICB firmware contains there main parts
  - The firmware saves the received ECG signals from the“RF Network Access Point” board
  - Creates TCP/IP packets
  - The TCP packets are prepared and then sent to the hospital via the Internet

WAPU(4/4)

TCP/IP Packetization

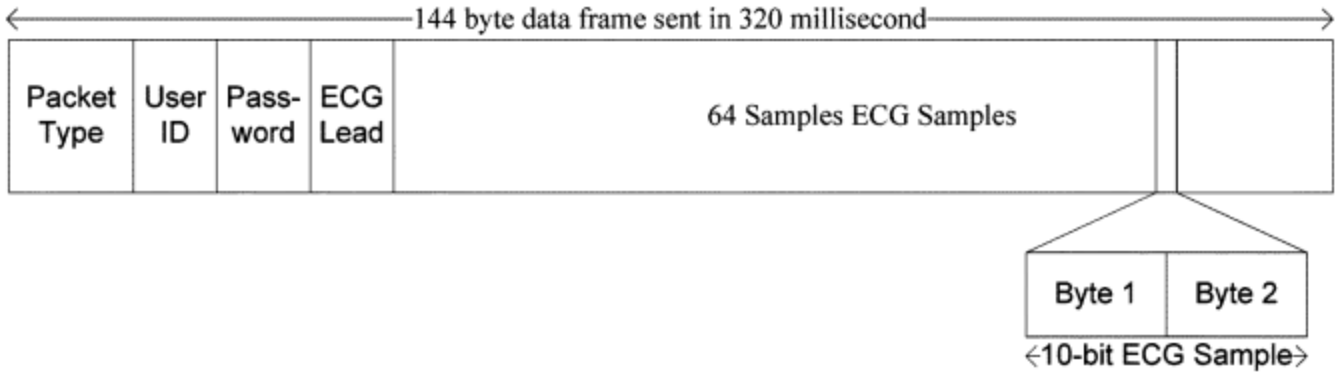

Fig. 6. TCP data format for ECG signals.

HOSPITAL

- The Windows server is used as the operating system on the computer server and the database is the SQL server.

- These three main parts：
  - (1) ECG server
  - (2) ECG database
  - (3) ECG monitoring

ECG Server Application

- This application is implemented in the Microsoft Development Environment—Microsoft Visual C#.
- For each patient, a specific TCP port is assigned.
- This software is a real-time client server application.
- Security information is processed in order to verify the sessions and packet's authenticity.

ECG Database

- ECG signal records for a particular patient can be retrieved via its "PatientID" in the ECGSignal table.
- Each ECG signal record includes 64 ECG samples.

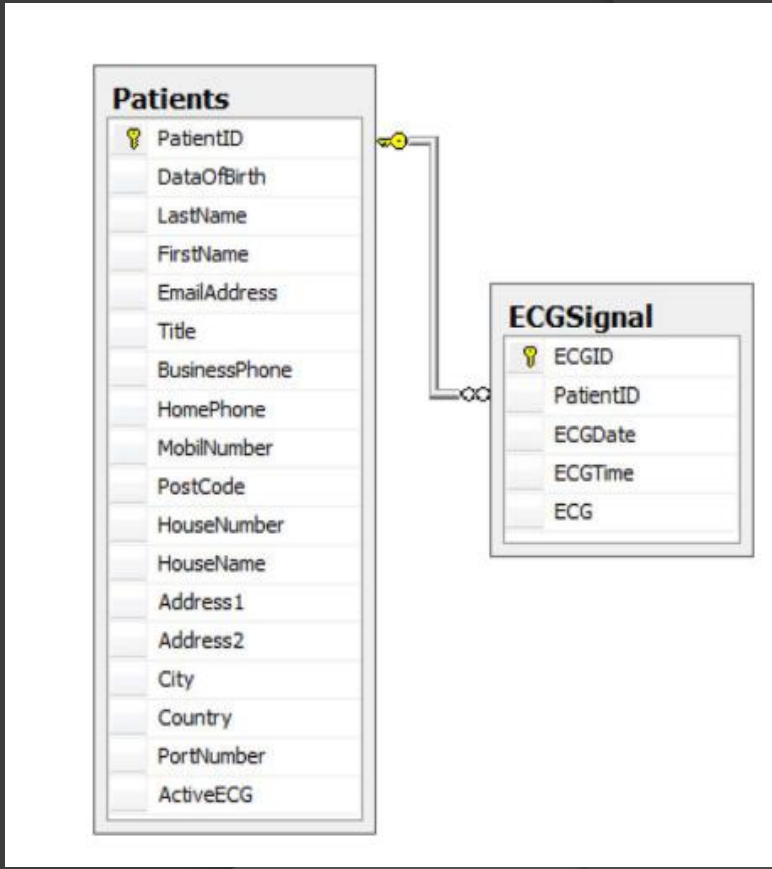

ECG Monitoring

- Some of the functionalities of this application are as follows:
  - Patient database: ability to add, delete, and modify patient information
  - Online plotting: online ECG signals are visualized for more than one patient at any time
  - Offline plotting: plotting of saved ECG signals and the ability to move signals forward and backward

End-to-end activity for transmitting ECG signals.

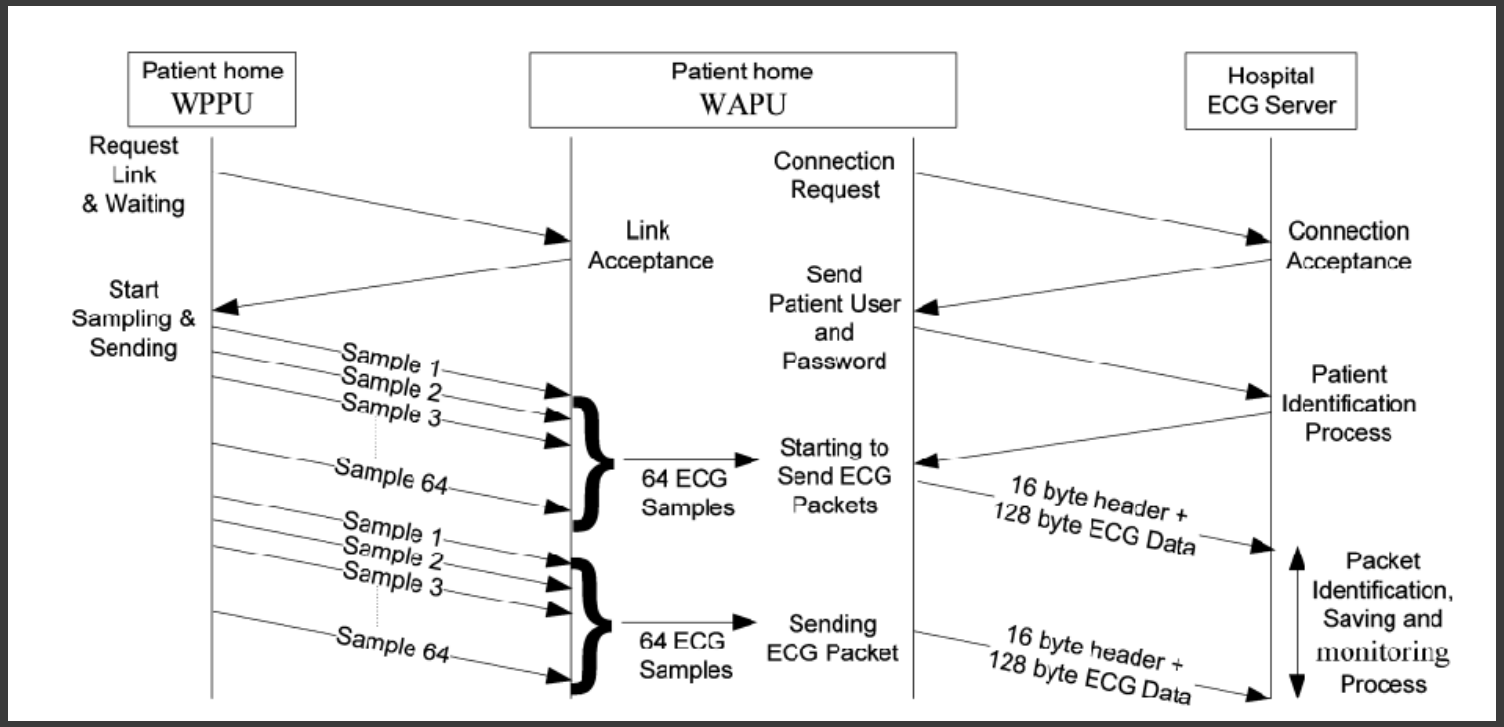

- this diagram clearly shows that 64 ECG samples are converted into a single packet for transmission.

Result

- This figure also shows that the wireless-link packet loss is less than 5% for distances less than 20 m.

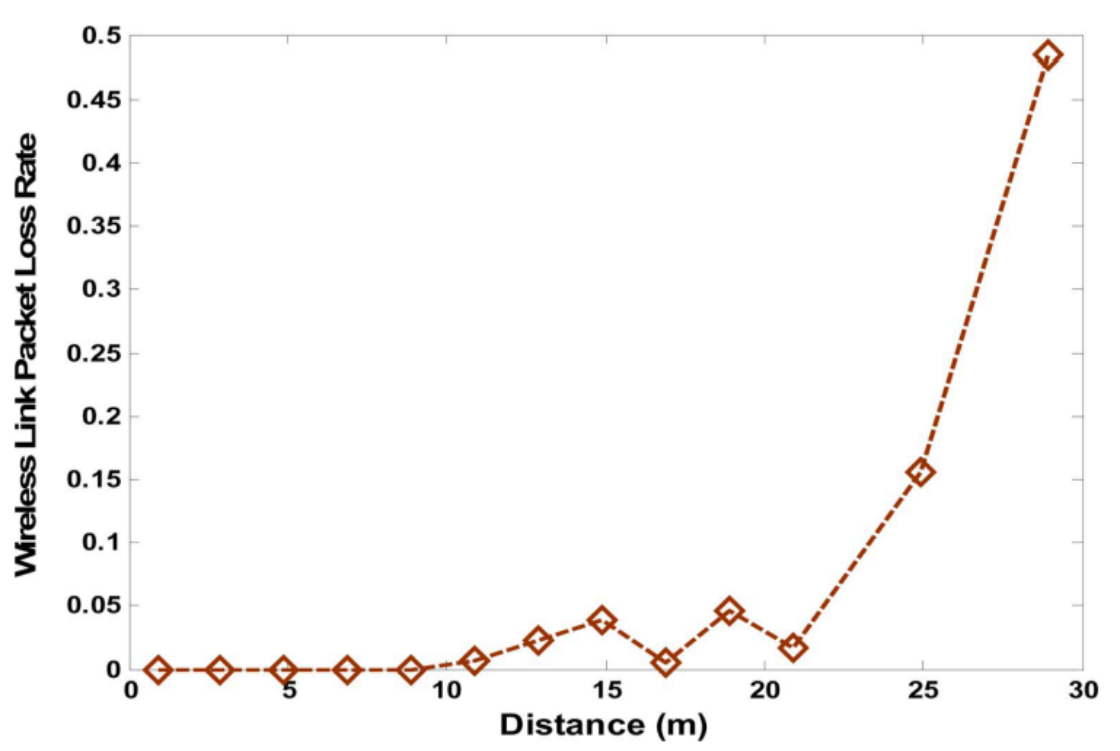

Packet Loss Versus Range

Result

- As one can infer from this equation, the packet retransmission can mitigate the impact of a lossy channel.

$$p_L = P_e^{C_r+1}.$$

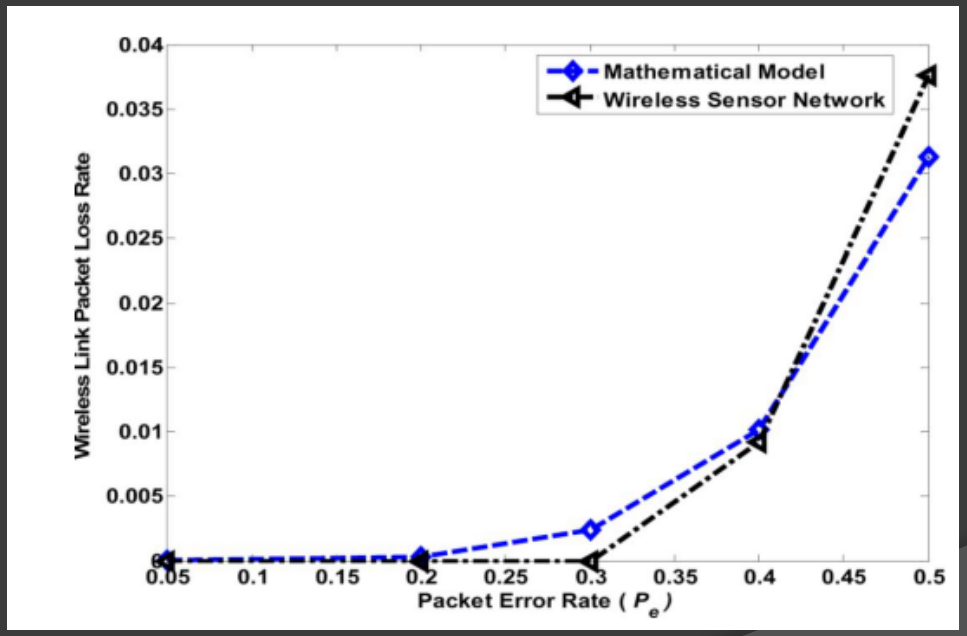

CONCLUSION

- Currently available systems for monitoring physiological signals suffer from technical limitations.
- A novel wireless sensor network structure. remote monitoring system of physiological signals was presented.
- It also lowers the cost involved with monitoring patients and increases the efficient exploitation of physiological data.

References

- Texas Instruments, SimpliciTI Compliant Protocol Stack. 2008.[Online]. Available
- R. Fensli, E. Gunnarson, and T. Gundersen, “A wearable ECG- recording system for continuous arrhythmia monitoring in a wireless tele-home-care situation,” in Proc. 18th IEEE Symp. Computer-Based Medical Systems, 2005, pp. 407–412.
- J. Coosemans, B. Hermans, and R. Puers, “Integrating wireless ECG monitoring in textiles,” Sens. Actuators A, Phys., vol. 130–131, pp.48–53, 2006.